Certificate Policy and Certification Practice Statement

TLS Server certificates

Version: **6.1**

Date: **Nov 09, 2026**

Approved by: Andrea Sassetti

Document code: MODAC_A_66

Distribution: PUBLIC



Sassetti
Andrea
09.11.2026
08:39:43
UTC

Table of Contents

1 INTRODUCTION 8
1.1 OVERVIEW 8
1.2 DOCUMENT IDENTIFICATION 8
1.3 PKI PARTICIPANTS 9
1.3.1 Certification Authorities 9
1.3.2 Registration Authorities 13
1.3.3 Subscribers 13
1.3.4 Relying parties 14
1.3.5 Resellers 14
1.4 CERTIFICATE USAGE 14
1.4.1 Appropriate certificate uses 14
1.4.2 Prohibited certificate uses 15
1.5 POLICY ADMINISTRATION 15
1.5.1 Organization administering the document 15
1.5.2 Contact person 15
1.5.3 Person determining CPS suitability for the policy 16
1.5.4 CPS approval procedures 16
1.6 DEFINITIONS AND ACRONYMS 16
1.7 NORMATIVE REFERENCES 17

2 PUBLICATIONS AND REPOSITORY RESPONSIBILITIES 19
2.1 REPOSITORIES 19
2.2 PUBLICATION OF INFORMATION 19
2.2.1 CCADB Disclosure and Root Programs information 19
2.3 TIME OR FREQUENCY OF PUBLICATIONS 20
2.4 ACCESS CONTROL ON REPOSITORIES 20

3 IDENTIFICATION AND AUTHENTICATION (I&A) 21
3.1 NAMING 21
3.1.1 Types of names 21
3.1.2 Need for names to be meaningful 21
3.1.3 Anonymity or pseudonymity of subscribers 21
3.1.4 Rules for interpreting various name forms 21
3.1.5 Uniqueness of names 21
3.1.6 Recognition, authentication, and role of trademarks 21
3.2 INITIAL IDENTITY VALIDATION 22
3.2.1 Method to prove possession of private key 22
3.2.2 Authentication of organization and domain identity 22
3.2.3 Authentication of individual identity 26
3.2.4 Non-verified subscriber information 26
3.2.5 Validation of authority 27
3.2.6 Criteria for interoperation 27
3.3 IDENTIFICATION AND AUTHENTICATION FOR RE-KEY REQUESTS 27
3.3.1 Identification and authentication for routine re-key 27
3.3.2 Identification and authentication for re-key after revocation 28
3.4 IDENTIFICATION AND AUTHENTICATION FOR REVOCATION REQUESTS 28

4 CERTIFICATE MANAGEMENT OPERATIONAL REQUIREMENTS 29
4.1 CERTIFICATE APPLICATION 29
4.1.1 Who can submit a certificate application 29
4.1.2 Enrollment process and responsibilities 29

4.2 CERTIFICATE APPLICATION PROCESSING 31
4.2.1 Performing identification and authentication functions 31
4.2.2 Approval or rejection of certificate applications 32
4.2.3 Time to process certificate applications 32
4.3 CERTIFICATE ISSUANCE 32
4.3.1 CA actions during certificate issuance 32
4.3.2 Notification to subscriber by the CA of issuance of certificate 33
4.4 CERTIFICATE ACCEPTANCE 33
4.4.1 Conduct constituting certificate acceptance 33
4.4.2 Publication of the certificate by the CA 33
4.4.3 Notification of certificate issuance by the CA to other entities 34
4.5 KEY PAIR AND CERTIFICATE USAGE 34
4.5.1 Subscriber private key and certificate usage 34
4.5.2 Relying party public key and certificate usage 34
4.6 CERTIFICATE RENEWAL 34
4.6.1 Circumstance for certificate renewal 34
4.6.2 Who may request renewal 34
4.6.3 Processing certificate renewal requests 34
4.6.4 Notification of new certificate issuance to subscriber 34
4.6.5 Conduct constituting acceptance of a renewal certificate 34
4.6.6 Publication of the renewal certificate by the CA 34
4.6.7 Notification of certificate issuance by the CA to other entities 35
4.7 CERTIFICATE RE-KEY 35
4.7.1 Circumstance for certificate re-key 35
4.7.2 Who may request certification of a new public key 35
4.7.3 Processing certificate re-key requests 35
4.7.4 Notification of new certificate issuance to subscriber 35
4.7.5 Conduct constituting acceptance of a re-keyed certificate 35
4.7.6 Publication of the re-keyed certificate by the CA 35
4.7.7 Notification of certificate issuance by the CA to other entities 35
4.8 CERTIFICATE MODIFICATION 35
4.8.1 Circumstance for certificate modification 35
4.8.2 Who may request certificate modification 36
4.8.3 Processing certificate modification requests 36
4.8.4 Notification of new certificate issuance to subscriber 36
4.8.5 Conduct constituting acceptance of modified certificate 36
4.8.6 Publication of the modified certificate by the CA 36
4.8.7 Notification of certificate issuance by the CA to other entities 36
4.9 CERTIFICATE SUSPENSION AND REVOCATION 36
4.9.1 Circumstances for revocation 36
4.9.2 Who can request revocation 38
4.9.3 Procedure for revocation request 39
4.9.4 Revocation request grace period 39
4.9.5 Time within which CA must process the revocation request 39
4.9.6 Revocation checking requirement for relying parties 39
4.9.7 CRL issuance frequency 39
4.9.8 Maximum latency for CRLs 39
4.9.9 On-line revocation/status checking availability 39
4.9.10 On-line revocation checking requirements 40

4.9.11 Other forms of revocation advertisements available 40
4.9.12 Special requirements related to key compromise 40
4.9.13 Circumstances for suspension 40
4.9.14 Who can request suspension 40
4.9.15 Procedure for suspension request 40
4.9.16 Limits on suspension period 41
4.10 CERTIFICATE STATUS SERVICES 41
4.10.1 Operational characteristics 41
4.10.2 Service availability 41
4.10.3 Optional features 41
4.11 END OF SUBSCRIPTION 41
4.12 KEY ESCROW AND RECOVERY 41
4.12.1 Key escrow and recovery policy and practices 41
4.12.2 Session key encapsulation and recovery policy and practices 42
5 FACILITY, MANAGEMENT, AND OPERATIONAL CONTROLS 43
5.1 PHYSICAL CONTROLS 43
5.1.1 Site location and construction 43
5.1.2 Physical access 43
5.1.3 Power and air conditioning 43
5.1.4 Water exposures 43
5.1.5 Fire prevention and protection 43
5.1.6 Media storage 43
5.1.7 Waste disposal 44
5.1.8 Off-site backup 44
5.2 PROCEDURAL CONTROLS 44
5.2.1 Trusted roles 44
5.2.2 Number of persons required per task 44
5.2.3 Identification and authentication for each role 44
5.2.4 Roles requiring separation of duties 45
5.3 PERSONNEL CONTROLS 45
5.3.1 Qualifications, experience, and clearance requirements 45
5.3.2 Background check procedures 45
5.3.3 Training requirements 45
5.3.4 Retraining frequency and requirements 45
5.3.5 Job rotation frequency and sequence 46
5.3.6 Sanctions for unauthorized actions 46
5.3.7 Independent contractor requirements 46
5.3.8 Documentation supplied to personnel 46
5.4 AUDIT LOGGING PROCEDURES 46
5.4.1 Types of events recorded 46
5.4.2 Frequency of processing log 46
5.4.3 Retention period for audit log 46
5.4.4 Protection of audit log 47
5.4.5 Audit log backup procedures 47
5.4.6 Audit collection system (internal vs. external) 47
5.4.7 Notification to event-causing subject 47
5.4.8 Vulnerability assessments 47
5.5 RECORDS ARCHIVAL 47
5.5.1 Types of records archived 47

5.5.2 Retention period for archive 48
5.5.3 Protection of archive 48
5.5.4 Archive backup procedures 48
5.5.5 Requirements for time-stamping of records 48
5.5.6 Archive collection system (internal or external) 48
5.5.7 Procedures to obtain and verify archive information 48
5.6 KEY CHANGEOVER 48
5.6.1 Root CA 48
5.6.2 Subordinate CA 48
5.7 COMPROMISE AND DISASTER RECOVERY 49
5.7.1 Incident, compromise and mass revocation handling procedures 49
5.7.2 Computing resources, software, and/or data are corrupted 50
5.7.3 Entity private key compromise procedures 50
5.7.4 Business continuity capabilities after a disaster 51
5.8 CA OR RA TERMINATION 51
6 TECHNICAL SECURITY CONTROLS 52
6.1 KEY PAIR GENERATION AND INSTALLATION 52
6.1.1 Key pair generation 52
6.1.2 Private Key delivery to subscriber 52
6.1.3 Public key delivery to certificate issuer 52
6.1.4 CA public key delivery to relying parties 52
6.1.5 Key sizes 52
6.1.6 Public key parameters generation and quality checking 53
6.1.7 Key usage purposes (as per X.509 v3 key usage field) 53
6.2 PRIVATE KEY PROTECTION AND CRYPTOGRAPHIC MODULE ENGINEERING CONTROLS 53
6.2.1 Cryptographic module standards and controls 53
6.2.2 Private Key (n out of m) multi-person control 53
6.2.3 Private Key escrow 53
6.2.4 Private Key backup 54
6.2.5 Private Key archival 54
6.2.6 Private Key transfer into or from a cryptographic module 54
6.2.7 Private Key storage on cryptographic module 54
6.2.8 Method of activating private key 54
6.2.9 Method of deactivating private key 54
6.2.10 Method of destroying private key 54
6.2.11 Cryptographic Module Rating 54
6.3 OTHER ASPECTS OF KEY PAIR MANAGEMENT 54
6.3.1 Public key archival 54
6.3.2 Operational Lifetime of Certificates and Keys 55
6.4 ACTIVATION DATA 55
6.4.1 Activation Data Generation and Installation 55
6.4.2 Activation Data Protection 55
6.4.3 Other Aspects of Activation Data 55
6.5 COMPUTER SECURITY CONTROLS 55
6.5.1 Specific computer security technical requirements 55
6.5.2 Computer security rating 56
6.6 LIFE CYCLE TECHNICAL CONTROLS 56
6.6.1 System Development Controls 56
6.6.2 Security Management Controls 56

6.6.3 Life Cycle Security Controls 56
6.7 NETWORK SECURITY CONTROLS 56
6.8 TIME-STAMPING 57
7 CERTIFICATE, CRL AND OCSP PROFILES 58
7.1 CERTIFICATE PROFILE 58
7.1.1 Version number(s) 58
7.1.2 Certificate content and extensions 58
7.1.3 Algorithm object identifiers 76
7.1.4 Name forms 76
7.1.5 Name constraints 78
7.1.6 Certificate policy object identifier 78
7.1.7 Usage of Policy Constraints extension 78
7.1.8 Policy qualifiers syntax and semantics 78
7.1.9 Processing semantics for the critical Certificate Policies extension 78
7.2 CRL PROFILE 78
7.2.1 Version Number(s) 78
7.2.2 CRL and CRL entry extensions 78
7.3 OCSP PROFILE 78
7.3.1 Version number(s) 79
7.3.2 OCSP extensions 79
8 COMPLIANCE AUDITS AND OTHER ASSESSMENTS 80
8.1 FREQUENCY OR CIRCUMSTANCES OF ASSESSMENT 80
8.2 IDENTITY AND QUALIFICATION OF ASSESSOR 80
8.3 ASSESSOR'S RELATIONSHIP TO ASSESSED ENTITY 80
8.4 TOPICS COVERED BY ASSESSMENT 80
8.5 ACTIONS TAKEN AS A RESULT OF DEFICIENCY 80
8.6 COMMUNICATION OF RESULTS 81
8.7 SELF-AUDITS 81
9 OTHER BUSINESS AND LEGAL MATTERS 82
9.1 SERVICE FEES 82
9.1.1 Certificate issuance or renewal fees 82
9.1.2 Certificate access fees 82
9.1.3 Revocation or status information access fees 82
9.1.4 Fees for other services 82
9.1.5 Refund policy 82
9.2 FINANCIAL RESPONSIBILITY 82
9.2.1 Insurance coverage 82
9.2.2 Other assets 82
9.2.3 Insurance or warranty coverage for end-entities 82
9.3 CONFIDENTIALITY OF BUSINESS INFORMATION 82
9.3.1 Scope of confidential information 82
9.3.2 Information not within the scope of confidential information 83
9.3.3 Responsibility to protect confidential information 83
9.4 PRIVACY OF PERSONAL INFORMATION 83
9.4.1 Privacy plan 83
9.4.2 Information treated as private 83
9.4.3 Information not deemed private 84
9.4.4 Responsibility to protect private information 84
9.4.5 Notice and consent to use private information 84
9.4.6 Disclosure pursuant to judicial or administrative process 84

9.4.7 Other information disclosure circumstances 84
9.5 INTELLECTUAL PROPERTY RIGHTS 84
9.6 REPRESENTATIONS AND WARRANTIES 84
9.6.1 CA Representations and Warranties 84
9.6.2 RA Representations and Warranties 85
9.6.3 Subscriber Representations and Warranties 85
9.6.4 Relying Party Representations and Warranties 86
9.6.5 Representations and warranties of other participants 87
9.7 DISCLAIMERS OF WARRANTIES 87
9.8 LIMITATIONS OF LIABILITY 87
9.9 INDEMNITIES 88
9.9.1 Indemnification by CAs 88
9.9.2 Indemnification by Subscribers 88
9.10 TERM AND TERMINATION 88
9.10.1 Term 88
9.10.2 Termination 88
9.10.3 Effect of termination and survival 89
9.11 INDIVIDUAL NOTICES AND COMMUNICATIONS WITH PARTICIPANTS 89
9.12 AMENDMENTS 89
9.12.1 Procedure for amendment 89
9.12.2 Notification mechanism and period 89
9.12.3 Circumstances under which OID must be changed 89
9.13 DISPUTE RESOLUTION PROVISIONS 89
9.14 GOVERNING LAW 90
9.15 COMPLIANCE WITH APPLICABLE LAW 90
9.16 MISCELLANEOUS PROVISIONS 90
9.16.1 Entire agreement 90
9.16.2 Assignment 90
9.16.3 Severability 90
9.16.4 Enforcement (attorneys' fees and waiver of rights) 90
9.16.5 Force majeure 90
9.17 OTHER PROVISIONS 91
9.17.1 Service levels 91
APPENDIX A – CHANGE HISTORY 92

1 Introduction

1.1 Overview

Actalis S.p.A., a company of the Aruba S.p.A. group, is a leading provider of certification services since 2002, accredited by AgID under the European Directive on Electronic Signatures, then under the European Regulation EU n.910/2014 ("eIDAS"). Actalis offers several types of certificates and related management services, as well as other trust services and solutions (www.actalis.com).

A certificate binds a public key to a set of information identifying an entity (an individual or an organisation). This entity, the certificate holder, possesses and uses the corresponding private key. The certificate is generated and issued to the holder by a trusted third party known as a **Certification Authority** (CA). The certificate is digitally signed by the CA.

The reliability of a certificate, in particular the association - attested by the certificate - between a given public key and a given identity, critically depends on the CA's operating procedures, the obligations and responsibilities of the CA and the certificate Subscriber, and the CA's physical, technical, and operational security controls. All these aspects are described in a public document called Certification Practice Statement (CPS) and/or a separate document called Certificate Policy (CP), according to [RFC 3647], or a combined document.

This document is the Actalis' combined CP/CPS relevant to the issuance and management of TLS Server certificates. This CPS is structured according to the outline set forth in section 6 of [RFC 3647], as may be amended by the CA/Browser Forum's TLS BRs.

Actalis complies with the latest published versions of the following documents:

- The CA/Browser Forum's "TLS Baseline Requirements" and "EV Guidelines", available at https://www.cabforum.org;
- The "CCADB Policy", available at https://www.ccadb.org/policy;
- All applicable Root Program policies, including, but not limited to, the "Chrome Root Program", the "Apple Root Program", the "Mozilla Root Store Policy" and the "Microsoft Root Program".

Where the above policies impose requirements of differing stringency, particularly with respect to Root Programs, Actalis complies with the most stringent requirement. In the event of any inconsistency between this CPS and those documents, the latter take precedence.

This work is licensed under the Creative Commons Attribution-NoDerivatives 4.0 International License. To view a copy of this license, visit http://creativecommons.org/licenses/by-nd/4.0/ or send a letter to Creative Commons, PO Box 1866, Mountain View, CA 94042, USA.

1.2 Document Identification

This document is the **Certificate Policy and Certification Practice Statement** (hereinafter referred to only as CPS) applying to **TLS Server certificates** issued by **Actalis S.p.A.** Version and time of last revision are indicated on the first page.

This document is published on Actalis' web site in two languages: Italian and English. In the event of any inconsistency between the two versions, the English version takes precedence.

This CPS is published as a signed PDF document in order to ensure its origin and integrity.

Actalis also publishes this CPS in Markdown, to facilitate transparency, reviewability, version comparison, and change tracking. Where this CPS is published in multiple formats, Actalis ensures that the official text is consistent across formats and clearly identifies the authoritative version in the event of discrepancy.The authoritative version is the document in pdf format.

1.3 PKI participants

1.3.1 Certification Authorities

The Certification Authority (CA) is the trusted third party who issues the certificates and signs them with its own private key (CA key). Furthermore, the CA manages the status of the certificates.

The Actalis PKI (Public Key Infrastructure), on which the TLS Server certificate issuance and management service is based, is a two-level hierarchy, as shown in the following diagram:

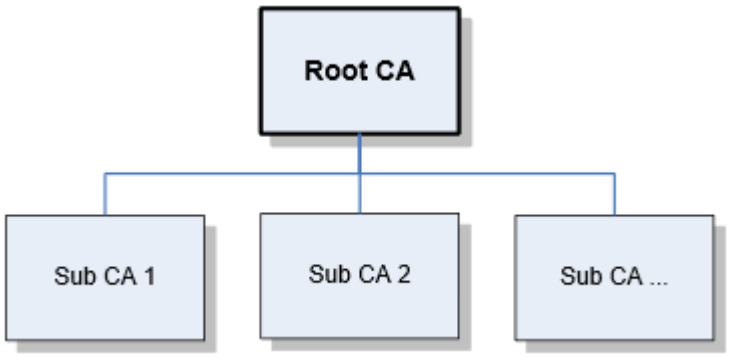

The Root CA is used exclusively to issue Subordinate CA certificates, including any cross-certificates, the corresponding CRLs and infrastructure certificates, and is kept offline when not in use. Subordinate CAs are the CAs that issue end-entity certificates.
In particular, to date there are:

- A *legacy* hierarchy based on the single multi-purpose Root CA *"Actalis Authentication Root CA",* included in the main root certificate stores, currently in use. Under this single Root CA, various SubCAs operate that issue different types of certificates (TLS Server, Code Signing, S/MIME, etc.);
- New hierarchies based on *single-purpose* Root CAs detailed below, which are currently not included in the main root certificate stores. These hierarchies are intended to replace the legacy structure, forming the basis for the structured migration of certificates. The new hierarchies are specific to the type of certificate (TLS Server, Code Signing, S/MIME, etc.).

Actalis manages its PKI hierarchy in accordance with the applicable Root Store Program requirements concerning the lifecycle of certification infrastructures, including the requirements and expectations relating to single-purpose PKI hierarchies, Root CA succession planning and the progressive retirement of legacy or multipurpose Root CAs. The new Root CA hierarchies dedicated exclusively to the issuance of TLS Server certificates, described in this section, are intended to support migration from the existing multipurpose hierarchy to hierarchies dedicated to TLS Server authentication, in accordance with the applicable Root Store Program policies and related transition plans.
Some of the Root CAs underlying the new hierarchies have been cross-certified by the multipurpose Root CA, thereby enabling certificate issuance through the Subordinate CAs beneath those new Root CAs.

Within the framework of the service described in this document, the role of Root CA is played by the Italian company Actalis S.p.A. (hereinafter referred to as “Actalis”), identified as follows:

Company name:	**Actalis S.p.A.**
Registered Office:	**Via San Clemente 53 – 24036 Ponte S. Pietro (BG) – ITALY**
Legal representative:	**Massimiliano Carollo** (Chief Executive Officer)
VAT Reg. No. and Tax Code:	**03358520967**
Telephone (switchboard):	**+39 0575 050.350**
DUNS number:	**440-489-735**
ISO Object Identifier (OID):	**1.3.159**
Company web site:	http://www.actalis.it
Company e-mail address:	info@actalis.it

1.3.1.1 Root Certification Authorities

As anticipated, the role of Root CA is played by Actalis. As of the date of revision of this present CPS, Actalis' Root CA keys are those identified in the following table; for further details, see chapter 7.

Subject DN	SHA-256 Fingerprint	notBefore	notAfter
CN = Actalis Authentication Root CA O = Actalis S.p.A./03358520967 L = Milan C = IT	55926084EC963A64B96E2ABE01CE0BA86A64FBFEBCC7AAB5AFC155B37FD76066	22 September 2011	22 September 2030
CN = Actalis TLS Server ECC Root CA 2025 O = Actalis S.p.A. C = IT	4EFAADA2543E1E02666998574B3BAD96AE264088FA5917F75D32E7A609D1869C	28 February 2025	22 February 2050
CN = Actalis TLS Server RSA Root CA 2025 O = Actalis S.p.A. C = IT	6D0E47DFDE7CF48308CD4C6C1517DD1AF033DCC72BB0501C04268B03B58A9085	28 February 2025	22 February 2050

1.3.1.2 Subordinate Certification Authorities

As of the date of revision of this CPS, the **Subordinate CAs run by Actalis** are those identified in the following table. For further details, see chapter 7.

Subject DN	SHA-256 Fingerprint	notBefore	notAfter
CN = Actalis Organization Validated Server CA G3 O = Actalis S.p.A. L = Ponte San Pietro S = Bergamo C = IT	931AAA1EC9B2BA0FA59A82302F4F830628C86D9B2D2A50A4D1B2CE895C4CC648	06 July 2020	22 September 2030
CN = Actalis Extended Validation Server CA G3 O = Actalis S.p.A. L = Ponte San Pietro S = Bergamo C = IT	124EAAF26F570C4FB4D89F5D61078F15B885345FCAF0C57F3477D8C63B5AB26F	06 July 2020	22 September 2030
CN = Actalis Domain Validation Server CA G3 O = Actalis S.p.A. L = Ponte San Pietro S = Bergamo C = IT	3450B6D38290C3CA5D7BB38B71495BBF72C6D0C44DBA292245F9BCA9843A9FFF	06 July 2020	22 September 2030
CN = Actalis DV Server ACME CA G1 O = Actalis S.p.A. L = Ponte San Pietro S = Bergamo C = IT	C0A9FB425D0EDEBC72BC6C47AD3D3A2B68245ED1D59A5883BF19CE9F8C4DED1F	06 June 2023	22 September 2030

CN = Actalis Domain Validated TLS Server ECC CA 2025 O = Actalis S.p.A. L = Ponte San Pietro S = Bergamo C = IT	E102A52A016B025B31C749A9A0A7F4650E1227AFA27C27E9A37C846AD42FA8B0	07 July 2025	05 July 2035
CN = Actalis Extended Validation TLS Server ECC CA 2025 O = Actalis S.p.A. L = Ponte San Pietro S = Bergamo C = IT	12D8FBFFEB27481EB0EECD032336D6D1E2B1A678A9B1018E653E7FC253D929A5	07 July 2025	05 July 2035
CN = Actalis Organization Validated TLS Server ECC CA 2025 O = Actalis S.p.A. L = Ponte San Pietro S = Bergamo C = IT	E7929CDA1A88D2E94016A3F2D52BE95DB1C28C178C425B4303A82E3E29293544	07 July 2025	05 July 2035
CN = Actalis Domain Validated TLS Server RSA CA 2025 O = Actalis S.p.A. L = Ponte San Pietro S = Bergamo C = IT	C511EF2F15EF7681EEADFF97F1E90596270EADB71BDA8F847AB36FFF15DC6264	07 July 2025	05 July 2035
CN = Actalis Extended Validation TLS Server RSA CA 2025 O = Actalis S.p.A. L = Ponte San Pietro S = Bergamo C = IT	8FA40E1594EB493E5D2954F577BB50473A3512F2D203A99B402BBCB608AED73B	07 July 2025	05 July 2035
CN = Actalis Organization Validated TLS Server RSA CA 2025 O = Actalis S.p.A. L = Ponte San Pietro S = Bergamo C = IT	BAE1C37CEE8621A3016AE4E76E36204949DA3160BCE5AE56CF4003860EE3B2CD	07 July 2025	05 July 2035

SubCA certificates can be issued, under an Actalis Root CA, for external CAs (i.e., not run by Actalis) upon signing a contract in which the operators of such SubCAs commit, among other things, to fully comply with the CAB Forum Baseline Requirements [BR][1] , the CCADB policy, and Browser's root programs, and to undergo an annual compliance audit by an independent and qualified auditor, providing Actalis promptly with the related annual audit reports. Actalis reserves the right to revoke external SubCA certificates, at its sole discretion, if such audits are not provided, or are provided with significant delay, or if they reveal serious issues.

Actalis notifies Root Store Programs, with the advance notice required by their respective policies, of the issuance of any CA certificate (Subordinate CA or Cross Certificate) that extends the trust boundary of the Root Stores or replaces an unrevoked CA certificate whose Subject CA Owner is not included in the Root Stores. Such certificates are not issued without the prior explicit approval, where required, of the relevant notified Program.

[1] Issuance of EV certificates by external SubCAs, under an Actalis' Root CA, is currently not allowed.

1.3.1.3 Cross Certificates

As of the review date of this CPS, the Actalis cross-certificates (cross-certification between the old and new Actalis Root CAs) are those identified below; for further details, see also Chapter 7.

Subject DN	SHA-256 Fingerprint	notBefore	notAfter
CN = Actalis TLS Server ECC Root CA 2025 O = Actalis S.p.A./03358520967 L = Milan C = IT	471F644699FD038E07D73D6E980586AA232FA7DCAD57380B0C89EDD1DCFDB61E	07 August 2025	22 September 2030
CN = Actalis TLS Server RSA Root CA 2025 O = Actalis S.p.A./03358520967 L = Milan C = IT	944D87943C5B47F4DBCE29F55CF92CDA8F27556BE6237D1C51D1B7E574F189D0	07 August 2025	22 September 2030

1.3.2 Registration Authorities

The Registration Authority (RA) is a person or an organization that is responsible for:

- collection and validation of certification requests and certificate management requests;
- registration of the Applicant, and related information, into the RA database;
- authorization of issuance, by the CA, of the requested certificates.

For EV certificates, all RA activities shall generally be performed by Actalis only.

For DV and OV certificates only, the CA may delegate some RA tasks to Delegated Third Parties (DTP), except for the validation of domain / IP address ownership or control that remains the sole responsibility of the CA.

Organizations that meet the requirements for “Enterprise RAs”, as set out in the [BR], may be authorized to operate as RAs solely for domains and IP addresses that they own or control. Authorization is subject to the execution of specific contractual agreements governing the authorized activities, compliance with the requirements set out in the [BR] and in the Certification Authority’s CP/CPS. These agreements also provide for operator training, periodic audits where applicable, and the use of the tools made available by the CA for certificate issuance and management requests.

1.3.3 Subscribers

Subscribers are those legal entities or individuals to whom Certificates are issued according to this CPS and who hold the private keys corresponding to their certificates. In particular:

- for OV and EV TLS Server certificates, the Subscriber may only be a legal entity (i.e., an organization);
- for DV TLS Server certificates, the Subscriber may be either a legal entity or an individual.

Except for DV TLS Server certificates, which by definition do not include Subject identity information, the Subscriber is the party identified in the Subject field of the certificate.

Prior to verification of identity and issuance of a certificate, any requesting Subscriber is defined as an **Applicant**. Once the Certificate is issued, the Applicant is referred to as the **Subscriber**.

The certificates governed by this CP/CPS are issued to Applicants established or residing in any jurisdiction worldwide, provided that Actalis can successfully complete all applicable validation procedures. Issuance is denied where the required information and documentation cannot be obtained or verified, or where issuance is prohibited by applicable law, judicial orders or binding sanctions.

The Customer, namely the individual or organization that purchases the certificate, is normally the Subscriber itself, but this is not a requirement (another entity may purchase the certificate on behalf of the Subscriber).

1.3.4 Relying parties

Relying Parties are recipients of a certificate who act on reliance on the information contained in the certificate. In the case of a TLS Server certificate, these are (for instance) the users of the relevant web site.

1.3.5 Resellers

Certificates may also be provided through Resellers (business partners), which in certain cases may also play the role of Registration Authorities, depending on the agreements with the CA.

1.4 Certificate usage

1.4.1 Appropriate certificate uses

Certificates issued under this CPS are meant to be used for enabling the TLS/SSL protocol on one or more servers.

A list of major platforms and browsers where certificates issued according to this CPS are trusted can be found on Actalis' web site at the following URL: https://www.actalis.it/products/ssl-certificate.aspx. Applicants are supposed to review that list before requesting certificates.

Actalis also issues other types of certificates (e.g. S/MIME and Code Signing) that are not regulated by this CPS, but by separate CPS's which can be found on the Actalis' web site.

It is assumed that the Applicant possesses the competence and tools necessary to request, install and use the certificate. Actalis can provide consultancy on request, as a separate service.

The following table shows the **classes** and **policies** of certificates issued under this CPS, and the applicable CAB Forum requirements. Each policy is identified by a specific **OID** (Object Identifier) under the Actalis arc **1.3.159**:

Class	Certificate policy	OID	CABF reqs.
EV	TLS Server EV (Extended Validation)	1.3.159.1.17.1	[BR], [EVGL]
OV	TLS Server Wildcard OV (Organization Validated)	1.3.159.1.19.1	[BR]
OV	TLS Server OV (Organization Validated)	1.3.159.1.20.1	[BR]
DV	TLS Server DV (Domain Validated)	1.3.159.1.22.1	[BR]
DV	TLS Server Wildcard DV (Domain Validated)	1.3.159.1.23.1	[BR]

The OID that identifies the certificate policy is contained in the *CertificatePolicies* certificate extension, as detailed in chapter 7. The same extension also contains the applicable Reserved Policy OID defined by CAB Forum.

In the case of *qualified* certificates according to the eIDAS regulation (see par. 7.1), the CertificatePolicies extension also includes the applicable policy OID defined in ETSI EN 319 411-2.

1.4.2 Prohibited certificate uses

Any use of the certificate other than provided for in section 1.4.1 is forbidden and may result, as soon as Actalis is made aware of it, in the revocation of the certificate (see also section 4.9.1).

Actalis also discourages the use of publicly trusted TLS certificates in critical infrastructures (for example, in the healthcare, transport or defence sectors) where Subscribers are unable to request their reissuance at very short notice following revocation.

Actalis reserves the right to put in operation new subordinate Cas, i.e. intermediate CAs (ICAs), when needed according to its own determinations, also taking into account the requirements of Browsers' root programs, and to stop issuing certificates from the old ones. In some circumstances, Actalis may also need to revoke certain ICAs before their natural expiration.

Actalis therefore strongly recommends that *ICA certificates not be embedded into applications and/or platforms*.

Actalis strongly discourages "*certificate pinning*" and does not consider it a sufficient reason to delay revocation.

Subscribers should not use certificates trusted for the web in contexts where there is no such need (e.g., on private networks), especially where a quick replacement of certificates is not viable.

Subscribers and relying parties should keep in mind that any certificates trusted by the browsers must comply with all requirements of all Browsers' root programs and policies, including the revocation periods recalled in section 4.9.1 of this CPS.

1.5 Policy administration

1.5.1 Organization administering the document

This CPS is developed, reviewed, published and updated by Actalis S.p.A.

1.5.2 Contact person

For any enquiries about this CPS, please send e-mail to cps-admin@actalis.it.

1.5.2.1 Problem reporting

Actalis makes available to all interested parties (Subscribers, Relying Parties, Application Software Suppliers, law enforcement, etc.) two communication channels through which certificate problems can be reported to the CA at any time (24x7):

- the mailbox **cert-problem@actalis.it**, which the CA commits to timely read during working hours only (9 AM to 5 PM on Italian working days);
- the telephone number **+39-0575-050.376**, at which Actalis commits to answer at all times (24x7x365).

These channels cannot be used to request technical assistance of any kind, but only to report problems (such as misissuance, use of the certificate for unlawful purposes, etc.) that may warrant the revocation of the involved certificates.

Regardless of the communication channel used, the problem reporter must provide at least the following information, or the communication will be ignored:

- his/her full name;

- description of the alleged problem;
- enough information to identify the certificate in question, such as the address of the web site where the certificate is installed, or the certificate hostname, starting validity date, and serial number;

Such communications may be made in Italian or English; other languages are not handled.

The CA is committed to take charge of *proper communications* within 24 hours, start investigating the reported problem, and take the necessary measures, depending on the problem severity[2]. The priority assigned to the problem will depend on:

- the nature of the alleged problem;
- the identity of the reporter (reports received by a Court or law enforcement agents will be handled with higher priority than other messages);
- the law and/or regulations relevant for the alleged problem (e.g., reports of illegal acts will be handled with higher priority than other messages).

If the reported problem does exist, the CA will decide on a case-by-case basis the measures to be taken (e.g., revocation of the certificate) and will notify the reporter by e-mail.

1.5.3 Person determining CPS suitability for the policy

This CPS is approved by Actalis' CA services direction, after review by all internal stakeholders, taking into account the Requirements [BR] and Guidelines [EVGL], and the results and recommendations received from qualified auditors (see also section 8).

1.5.4 CPS approval procedures

Approval of this CPS follows the procedures defined in the company's Quality Management System.
The drafting, review and approval of the document are assigned to separate, mutually independent individuals or functions, ensuring segregation of responsibilities and review of the content before publication. Personnel responsible for drafting and reviewing this document possess specialist expertise in certification services and in the applicable regulatory, technical and industry requirements. The update process ensures the traceability of revisions and approvals. The update process provides for document version control (versioning), traceability of changes, reviews and approvals, and retention of the history of previous versions. Each version states its issue date and a summary of the changes introduced and is published only after the approval process has been completed.

This CP/CPS is reviewed and updated at least annually, i.e. within 365 days of the last update, and whenever changes to the applicable requirements or to the processes described require it to be amended.

1.6 Definitions and acronyms

AgID	Agenzia per l'Italia Digitale (Agency for a Digital Italy)
ARL	Authority Revocation List
CA	Certification Authority
CAA	CA Authorization (a type of DNS record)
CAB	Conformity Assessment Body

[2] Those who send unwanted messages (spam) will be prosecuted according to applicable laws.

CP	Certificate Policy
CPS	Certification Practice Statement
CRL	Certificate Revocation List
CSR	Certificate Signing Request
DBA	Doing Business As (trade name)
DCV	Domain Control Validation
DN	Distinguished Name
DV	Domain (Control) Validated
ECC	Elliptic Curve Cryptography
eIDAS	Electronic Identification and Trust Services (Regulation EU n.910/2014 as amended)
EV	Extended Validation
FIPS	Federal Information Processing Standard
FQDN	Fully Qualified Domain Name
gTLD	Generic TLD (Top-Level Domain)
HSM	Hardware Security Module
HTTP	Hyper-Text Transfer Protocol
I&A	Identification and Authentication
IDN	Internationalized Domain Name
ISMS	Information Security Management System
ISO	International Standards Organization
OCSP	On-line Certificate Status Protocol
OID	Object Identifier
OV	Organization Validated
PDF	Portable Document Format
PKI	Public Key Infrastructure
RA	Registration Authority
SAN	Subject Alternative Names ()
SSL	Secure Sockets Layer (all over this CPS, SSL refers to TLS unless otherwise specified)
TLS	Transport Layer Security
TSL	Trust-services Status List
TSP	Trust Service Provider
UPS	Uninterruptible Power Supply
VMD	Video Motion Detection

Throughout this document, certain terms shall be interpreted according to the definitions provided in [BR] and [EVGL]. In particular (but not limited to) the following terms: Subscriber, Subject, Applicant, Applicant Representative, Affiliate, Certificate Requester, Certificate Approver, Contract Signer, Authorization Domain Name, Base Domain Name, Domain Contact, Domain Registrant, Enterprise RA, Internal Name, Reserved IP Address.

1.7 Normative references

[DLGS196] Legislative Decree n.196 of 30 June 2003 “Personal data protection code”, published in the Supplemento Ordinario n.123 of the Gazzetta Ufficiale n.174 of 29 July 2003.

[RFC 2314] Kaliski, B., "PKCS #10: Certification Request Syntax Version 1.5", RFC 2314, March 1998. (http://www.ietf.org/rfc/rfc2314.txt)

[RFC 6960] Santesson, S., Myers, M., Ankney, R., Malpani, A., Galperin, S., and C. Adams, "X.509 Internet Public Key Infrastructure Online Certificate Status Protocol - OCSP", RFC 6960, June 2013. (http://www.ietf.org/rfc/rfc6960.txt)

[RFC 2616] Fielding, R., Gettys, J., Mogul, J., Frystyk, H., Masinter, L., Leach, P. and T. Berners-Lee, "Hypertext Transfer Protocol, HTTP/1.1", RFC 2616, June 1999. (http://www.ietf.org/rfc/rfc2616.txt)

[RFC 3647] Chokhani, S., Ford, W., Sabett, R., Merrill, C., and S. Wu, "Internet X.509 Public Key Infrastructure Certificate Policy and Certification Practices Framework", RFC 3647, November 2003. (http://www.ietf.org/rfc/rfc3647.txt)

[RFC 5280] Cooper, D., Santesson, S., Farrell, S., Boeyen, S., Housley, R., and W. Polk, "Internet X.509 Public Key Infrastructure Certificate and Certificate Revocation List (CRL) Profile", RFC 5280, May 2008. (http://www.ietf.org/rfc/rfc5280.txt)

[RFC 8657] Request for Comments: 8657, Certification Authority Authorization (CAA) Record Extensions for Account URI and Automatic Certificate Management Environment (ACME) Method Binding. H. Landau, et al. November 2019.

[RFC 8659] P. Hallam-Baker, R. Stradling, J. Hoffman-Andrews, “DNS Certification Authority Authorization (CAA) Resource Record”, RFC 8659, November 2019. (https://www.rfc-editor.org/rfc/rfc8659)

[CT] Laurie, B., Kasper, E., “Certificate Transparency”, RFC 6962, June 2013. (http://www.ietf.org/rfc/rfc6962.txt)

[ETSI411-1] ETSI EN 319 411-1: Electronic Signatures and Infrastructures (ESI); Policy and security requirements for Trust Service Providers issuing certificates; Part 1: General requirements, v1.1.1 (2016-02).

[ETSI411-2] ETSI EN 319 411-2: Electronic Signatures and Infrastructures (ESI); Policy and security requirements for Trust Service Providers issuing certificates; Part 2: Requirements for trust service providers issuing EU qualified certificates, v2.1.1 (2016-02).

[BR] CA/Browser Forum, “Baseline Requirements for the Issuance and Management of Publicly-Trusted Certificates”. (https://cabforum.org/working-groups/server/baseline-requirements/documents/)

[EVGL] CA/Browser Forum, “Guidelines For The Issuance And Management Of Extended Validation Certificates”. (https://cabforum.org/working-groups/server/extended-validation/documents/)

[GDPR] Regulation (EU) 2016/679 of the European Parliament and of the Council of 27 April 2016 on the protection of natural persons with regard to the processing of personal data and on the free movement of such data, and repealing Directive 95/46/EC (General Data Protection Regulation).

[ACME] Barnes, R., Hoffman-Andrews, J., McCarney, D., and J. Kasten, "Automatic Certificate Management Environment (ACME)", RFC 8555, March 2019. (https://www.rfc-editor.org/info/rfc8555)

[CCADB] CCADB Policy (https://www.ccadb.org/policy)

2 Publications and repository responsibilities

The term “repository” refers to a combination of on-line archives or registers containing information of public interest regarding the issuance and management of certificates described in this CPS.

2.1 Repositories

The Actalis repository is published on:

- the Actalis website (http://www.actalis.it and other Actalis websites therein referred to)

Actalis manages its repository and is directly responsible for it.

The repository is normally accessible on a continuous basis (7x24).

2.2 Publication of information

Actalis publishes at least the following documentation on its website:

- Certification Practice Statement (CPS)
- Root CA and SubCA certificates
- Terms & Conditions
- audit statements
- application forms

Actalis also publishes test web pages that allow Application Software Suppliers to test their software with Subscriber certificates that chain up to Actalis’ publicly trusted Root CAs.

2.2.1 CCADB Disclosure and Root Programs information

Actalis maintains accurate and current information in CCADB for its included Root CA Certificates and their subordinate CA Certificates (cross certificates included). Unless a shorter period is required by an applicable Root Store Program policy, Actalis updates CCADB information within fourteen (14) calendar days after a relevant change.

Actalis discloses in CCADB all subordinate CA Certificates, including cross-certificates, within seven (7) calendar days after issuance and before such subordinate CA Certificates are used to issue publicly trusted certificates. Actalis also discloses revoked subordinate CA Certificates within seven (7) calendar days after revocation, including the required revocation information. For each subordinate CA certificate included in the Mozilla Root Store, Actalis populates the “Pertaining to Certificates Issued by This CA” section of the corresponding CCADB record with either the CRL Distribution Point for the “Full CRL Issued By This CA” or a “JSON Array of Partitioned CRLs”, no later than seven (7) calendar days after such intermediate CA first issues a TLS Certificate.

Actalis maintains in CCADB the required points of contact, including at least one primary point of contact and a non-personal contact alias monitored by appropriate personnel.

Actalis publishes updated CP/CPS documents before changes become effective and submits updated CP/CPS information to CCADB no later than fourteen (14) calendar days after publication.

Actalis submits and maintains in CCADB the required audit statement information for in-scope Root CA Certificates and subordinate CA Certificates, including the required certificate fingerprints, audit standards, audit periods, policy documents, audit dates, and disclosures concerning incidents or audit findings, as applicable.

2.3 Time or frequency of publications

This CPS and any associated documents are published on the CA web site each time they are updated.

This CPS is reviewed and updated at least every year, also to ensure that it conforms to the latest versions of CAB Forum Requirements and Guidelines [BR], [EVGL], and other applicable standards and regulations.

See also section 4.10.

2.4 Access control on repositories

Anyone can freely access the repository in read-only mode.

Access to the repository in write-mode (e.g., for the publication of new or updated information) is only possible from workstations / servers directly connected to the repository's local network, subject to authentication.

3 Identification and Authentication (I&A)

The I&A procedures followed by Actalis comply with CAB Forum requirements. In particular, for all classes of certificates issued under this CPS, the CA performs at least the mandatory checks provided in [BR]. In addition, for EV certificates, the CA also performs at least the additional checks required by the [EVGL].

3.1 Naming

3.1.1 Types of names

Certificates issued according to this CPS normally contain a non-null Distinguished Name (DN) compliant with the ITU-T X.500 standard (ISO/IEC 9594) in both the Subject and the Issuer fields.

The Subject field may be *empty* in DV (Domain Validated) certificates, depending on how the certificate request was made; in such a case, the Subject Alternative Name (SAN) extension is flagged as *critical*.

Furthermore, all the requirements set forth in the [BR] and [EVGL] shall be met.

In particular, all TLS Server certificates shall include entries in the Subject Alternative Name (SAN) extension, where each entry is either a Fully Qualified Domain Name (FQDN) or an IP address. However, IP addresses are not allowed in DV (Domain Validated) and EV (Extended Validation) TLS Server certificates.

3.1.2 Need for names to be meaningful

Actalis inserts meaningful names in both the *subject* and the *issuer* fields of certificates, with the possible exception of the Subject field in DV certificates as previously noted.

3.1.3 Anonymity or pseudonymity of subscribers

Except for TLS Server certificates of class DV (Domain Validated), which by definition do not contain Subscriber identification information, in all other cases the certificate contains either the official (i.e. registered) name of the Subscriber or a verified DBA (Doing Business As) name.

3.1.4 Rules for interpreting various name forms

All name forms shall be interpreted according to the ITU-T X.500 (ISO/IEC 9594) and the RFC 5820 standards, also taking into account CAB Forum's Requirements [BR] and [EVGL] according to certificate type and class.

3.1.5 Uniqueness of names

No stipulation.

3.1.6 Recognition, authentication, and role of trademarks

Names that violate the intellectual property rights of others are not allowed into certificates. Actalis shall not be involved in any controversy whatsoever regarding the ownership of domain names, commercial names, commercial trademarks or services. Actalis reserves the right to reject the certificate application (or revoke an already issued certificate) in case of such a controversy.

3.2 Initial identity validation

3.2.1 Method to prove possession of private key

The proof-of-possession, by the Applicant, of the private key corresponding to the requested certificate is based on the cryptographic verification of the CSR (Certificate Signing Request) sent to the CA. In fact, the Applicant must transmit its public key to the CA in the form of a CSR (Certificate Signing Request) in PKCS#10 format [RFC2314]. The CA shall verify that the digital signature in the CSR is valid.

3.2.2 Authentication of organization and domain identity

3.2.2.1 Identity

When the certificate is to include the name or address of an organization, the CA shall verify the identity and address of the organization, and that the address is the Applicant's address of existence or operation. This verification is done in compliance with the CAB Forum's requirements [BR] and [EVGL] according to certificate type and class.

Actalis will normally query:

- for private organizations, the relevant company registry for the applicable jurisdiction or an equivalent private or governmental source of organization information meeting the requirements of §3.2.2.7;
- for public entities, the relevant official index or registry of public entities for the applicable jurisdiction.

In the event that the consultation of the above sources is not possible, or returns incomplete or obsolete information about the Applicant (e.g., registered identity and brands, address, phone numbers, contact persons, etc.), Actalis may accept an Attestation Letter signed by a lawyer, government official, or other reliable third party customarily relied upon for such information in the Applicant's jurisdiction, attesting to that information. Jointly with this document, it will also be necessary to make a copy of the license or different document proving the role of the third party available. This information must be written in Italian or, if in a different language, it must also be written in English.

Other information sources meeting the requirements of section 3.2.2.7 (see below) may also be used, at Actalis' sole discretion, depending on circumstances, to corroborate the information obtained from the above sources.

For EV TLS Server certificates, the approved information sources used for validating the Applicant's identity are those published on the Actalis website at the following address:
https://www.actalis.it/documenti-en/actalis-approved-incorporation-agencies.aspx.
This list of approved information sources is monitored and updated over time by the CA to ensure the highest standard of accuracy and reliability of the information provided.

The name of the Applicant must match the organization name resulting from such lookups. In case of mismatch (except for negligible differences like e.g., uppercase/lowercase, non-meaningful diacritics, or punctuation), unless the Applicant can provide explanatory evidence, the certificate application will be rejected. Any ambiguity must be solved by the Applicant.

The CA may use the same information sources to also verify the Applicant's address(es). When the claimed Applicant' address cannot be verified in that way, the Applicant will be required to provide to the CA a utility bill, or a bank or credit card statement reporting the Applicant's full address. Other forms of evidence may also be accepted by the CA, subject to a case-by-case evaluation by the CA.

The information gathered by the CA include at least:

- actual existence and status of the Applicant organization
- legal (i.e., registered) name of the Applicant organization
- full address of the Applicant organization's heads office and operation sites
- the Applicant organization's registration number issued by the relevant jurisdiction
- the Applicant organization's VAT and/or fiscal code or equivalent (where applicable)
- the Applicant organization general phone and/or fax number(s), if available
- the Applicant organization general email address(es), if available

As a rule, should the CA not be able to collect the above information by itself, the Applicant will be required to provide it to the CA, subject to the subsequent CA's evaluation of the trustworthiness of the provided information in view of the minimal requirements set forth in the [BR] and [EVGL].

For EV-class certificates, the CA shall also verify:

- **physical existence** of the Applicant (or an affiliate thereof) in line with section 3.2.2.4 of [EVGL], by consulting reliable national registers, such as business registers, from which information suitable for confirming its physical existence can be obtained;
- **operational existence** of the Applicant (or an affiliate thereof) in line with section 3.2.2.6 of [EVGL];
- whether the Applicant, the Contract Signer and the Certificate Approver, or their respective jurisdictions, appear on government lists of parties subject to **sanctions** or **restrictions**, or on similar exclusion lists; for further details, see Section 3.2.2.10. This check is performed before the certificate is issued. In the event of a match, the CA does not proceed with issuance of the EV certificate.

For the second item, Actalis will normally check that the Applicant has been in existence for at least 3 years, by querying reliable information sources, or ask the Applicant to prove possession of a demand deposit (or equivalent) bank account. To that aim, the Applicant may provide to the CA a letter of bank reference, dated and signed by the bank, on the bank's headed paper.

Actalis reserves the right to reject a certificate request in the event that it encounters problematic situations (e.g., bankruptcy proceedings, disputes, insolvency, etc.) involving the Applicant or am Applicant Representative.

3.2.2.2 DBA/Tradename

If the certificate Subject is to include a DBA (Doing Business As) or a registered trade name (not applicable to DV TLS Server certificates), the CA verifies the Applicant's right to use that DBA or registered trade name by consulting reliable registers, such as those maintained by WIPO, EUIPO or the competent national authorities, in accordance with the methods specified in the [BR] and [EVGL], depending on the certificate class and type.

3.2.2.3 Verification of country

Where the certificate Subject field is to include a country code (not applicable to DV TLS Server certificates), the CA verifies the country using one of the methods specified in Section 3.2.2.3 of the [BR], namely through authoritative national or international registers.

3.2.2.4 Validation of Domain Authorization or Control

Prior to issuing a TLS Server certificate, Actalis shall verify that each FQDN to be included in the certificate is controlled by the Applicant or – where applicable – by an affiliate thereof (that is, a parent, subsidiary, or sibling company). This verification (also referred to as Domain Control Validation or DCV) is performed by one of the following below.

First, Actalis selects an appropriate Authorization Domain Name (ADN) in accordance with the process specified in Section 3.2.2.4 of the [BR], starting from the requested FQDN or wildcard domain name and selecting a validation method compatible with the type of name. Actalis then validates that ADN using one of the following methods:

- The CA confirms, by directly querying the Domain Name Registrar, that the Applicant is the Domain Registrant. This method may only be used if the Base Domain Name is registered by Aruba S.p.A. (that is the Actalis' holding company). This method is implemented in compliance with §3.2.2.4.12 of [BR].
- The CA sends a random value by email to an address obtained by prepending "admin@", "administrator@", "webmaster@", "hostmaster@" or "postmaster@" to the ADN and receives a confirming response based on the same random value. This method is implemented in accordance with Section 3.2.2.4.4 of the [BR].
- The CA asks the Applicant to publish a file on the HTTP server at the ADN being validated, under the "/.well-known/pki-validation" directory, containing a random value provided by the CA, and then verifies that the file is present and contains the expected content. This method is implemented in accordance with Section 3.2.2.4.18 of the [BR].
- The CA asks the Applicant to publish a file on the HTTP server at the ADN being validated, under the "/.well-known/acme-challenge" directory, in accordance with Section 8.3 of RFC 8555 [ACME], containing the value provided by the CA, and then verifies that the file is present and contains the expected content. This method is implemented in accordance with Section 3.2.2.4.19 of the [BR].
- The CA asks the Applicant to add a TXT record containing a random value provided by the CA to the DNS information for the ADN, and then verifies that the record is present and contains the expected content. This method is implemented in accordance with Section 3.2.2.4.7 of the [BR].
- The CA verifies the presence, at the ADN, of a Persistent DCV TXT record identifying the Applicant. The record must be placed at the "validation-persist" label prepended to the ADN being validated. This method is implemented in accordance with Section 3.2.2.4.22 of the [BR].

In all cases, the DCV is done in full compliance with §3.2.2.4 of the [BR], and no DCV methods are employed by Actalis other than those allowed by the [BR]. As part of the DCV process, Actalis also performs DNSSEC validation back to the IANA DNSSEC root trust anchor using DNS resolvers that implement DNSSEC validation in accordance with RFC 4035 Section 5, support NSEC3 as specified in RFC 5155, support SHA-2 as specified in RFC 4509 and RFC 5702, and properly address the security considerations described in RFC 6840 Section 4, as required by §3.2.2.4 of the [BR].

The specific Domain Control Validation (DCV) method used for each FQDN or wildcard domain depends on the circumstances of the individual case and the certificate Applicant's preferences. The set of supported DCV methods may also vary depending on the channel used to request the certificate. For the email-based domain validation methods described in Sections 3.2.2.4.4 of the [BR], Actalis performs DNSSEC validation up to the IANA DNSSEC root trust anchor for all CNAME, CAA and TXT DNS queries used to determine the Authorization Domain Name and does not apply local policies that disable DNSSEC validation. For all other domain validation methods,

Actalis performs DNSSEC validation up to the IANA DNSSEC root trust anchor for all DNS queries associated with verifying domain authorization or control and does not apply local policies that disable DNSSEC validation for those queries.

3.2.2.5 Authentication for an IP Address

Before issuing a TLS Server certificate, the CA verifies that all IP addresses to be included in the certificate (not permitted in DV and EV certificates) are controlled by the Applicant or an Affiliate thereof (for example, a holding company or subsidiary) as described in section 3.2.2.5.1 of the [BR]. For this purpose, the Applicant demonstrates control of the IP address by publishing a file containing a random value provided by the CA on the HTTP server reachable at that address, under the "/.well-known/pki-validation" directory. The CA verifies that the file is present and that its content matches the expected value.

3.2.2.6 Wildcard Domain Validation

Prior to issuing a TLS Server certificate, if the certificate is to include a wildcard FQDN in the Subject commonName (CN) or in the Subject Alternative Name extension, Actalis shall determine if the wildcard character would fall within the label immediately to the left of a registry-controlled or public suffix; in such a case, the CA shall reject the certificate request unless the Applicant proves its rightful control of the entire Domain Namespace. For this verification, Actalis consults the Public Suffix List published at https://publicsuffix.org/.

3.2.2.7 Data Source Accuracy

Prior to using any data source as a Reliable Data Source, the CA shall evaluate the source for its reliability, accuracy, and resistance to alteration or falsification, according to section 3.2.2.7 of the [BR].

3.2.2.8 CAA Records

As part of the issuance process, the CA shall check for a CAA record for each dNSName in the Subject Alternative Name extension of the certificate to be issued, according to the procedure in RFC 6844 and in §3.2.2.8 of the [BR]. The CAs shall not issue the certificate unless either (1) the certificate request is consistent with the applicable CAA Resource Record set or (2) an exception applies. The CA's CAA identifying domain is "**actalis.it**".

As part of the validation of the CAA Records, Actalis performs DNSSEC validation on all DNS queries associated with CAA record lookups performed by the Primary Network Perspective, as required by §3.2.2.8 of the [BR].

3.2.2.9 Multi-Perspective Issuance Corroboration

To strengthen protection against Border Gateway Protocol (BGP) attacks or hijacking, Actalis implements Multi-Perspective Issuance Corroboration (MPIC) for Domain Control Validation (DCV) and CAA record checks, in accordance with Section 3.2.2.9 of the [BR].

Specifically, Actalis uses 5 (five) remote network perspectives deployed in the following geographic regions:

- *eu-central*
- *eu-west*
- *us-east*
- *ap-northeast*
- *ap-southeast*

These network perspectives are independent of the primary perspective operating at the Actalis data centre.

Certificate issuance may proceed only when the MPIC validation result satisfies a quorum of at least 4 (four) network perspectives. If the required quorum is not reached, Actalis does not issue the certificate and returns an interactive or application error to the Applicant, depending on the request channel.

MPIC is applied to the domain validation methods described in Section 3.2.2.4 of this CP/CPS and to CAA record checks, in the cases and in the manner specified in Section 3.2.2.9 of the [BR]

3.2.2.10 Exclusion Lists

Before authorizing issuance of an EV TLS Server certificate, Actalis checks the Applicant, the Contract Signer and the Certificate Approver, as well as the Applicant's jurisdiction of incorporation or registration and place of business, against government lists of parties subject to prohibitions or restrictions, lists of prohibited persons or entities, other legally prescribed blocklists and applicable sanctions regimes[3], including secondary sanctions.

The check is performed by consulting authoritative lists in European Union and US jurisdictions or other lists considered reliable by Actalis. These checks are appropriately recorded to ensure full traceability of the actions performed.

If the Applicant, the Contract Signer or the Certificate Approver appears on one or more sanctions lists, Actalis does block issuance of the certificate.

3.2.3 Authentication of individual identity

For certificates containing Subject Identity Information, if the Applicant is a natural person the CA shall verify the Applicant's name, Applicant's address, and the authenticity of the certificate request in compliance with section 3.2.2 of the [BR]. To that aim, Actalis will normally:

- verify the Applicant's name using a legible copy, which discernibly shows the Applicant's face, of at least one currently valid government-issued photo ID (passport, driver's license, military ID, national ID, or equivalent document type) and will inspect the copy for any indication of alteration or falsification;
- verify the Applicant's address using a form of identification that Actalis determines to be reliable, such as a government ID, utility bill, or bank or credit card statement. Actalis may rely on the same government-issued ID that was used to verify the Applicant's name;
- verify the certificate request with the Applicant using a reliable method of communication.

3.2.4 Non-verified subscriber information

The CA does not verify the following Subscriber information:

- information not needed for Subscriber identification purposes;
- email addresses specified in certificate application forms;

[3] By way of example and without limitation, the Certification Authority consults the sanctions lists published by OFAC and the European Union, including through aggregation services provided by specialised providers, such as *OpenSanctions.*

In general, the CA does not verify the correctness of any information received from the Applicant that is not intended to be included in security-sensitive fields of the certificate and is not necessary for the issuance and subsequent management (e.g. revocation) of the certificate.

3.2.5 Validation of authority

For certificates containing Subject Identity Information, if the Applicant is an organization the CA shall use a Reliable Method of Communication to verify the authenticity of the Applicant Representative's certificate request, in line with CAB Forum's [BR] or [EVG} according to certificate type and class.

The CA may use the sources listed in section 3.2.2.1 to verify the Reliable Method of Communication.

Actalis will normally use one the following validation methods:

- By telephone: a CA validation specialist contacts the Applicant by telephone, through the Applicant organization's general phone number (previously found in a reliable source of information) and asks confirmation that the certificate request received from Applicant Representative is authentic.
- By on-line authentication: the Applicant Representative sends the certificate request to the CA via a web site or web service that requires on-line authentication using personal credentials provided to the Applicant Representative after a suitable identification procedure by the CA.
- By certified email: the Applicant specifies the name and contact details of its Representative(s) in an email message sent to the CA via a certified email service[4] (or an equivalent service), from the Applicant's certified email address (which must be found in a reliable information source);
- By digital signature: the Applicant sends to the CA a certificate application form, including the name and contact details of the Applicant Representative(s), as a digitally signed document; the signature must be a *qualified electronic signature* (according to EU legislation) and the signer's certificate must be valid (not expired nor revoked) and clearly ascribable to the Applicant.
- By formal purchase order: the name and contact details of the Applicant Representative are provided to the CA in attachment to a formal purchase order issued directly by the Applicant, written on the Applicant's headed paper, including complete identifying data of the Applicant and sent to the CA by the Applicant's purchasing department.

For EV certificates, the CA shall verify the Name, Title, and Authority (Agency) of Contract Signer and Certificate Approver according to section 11.8 of the [EVGL]. To the aim of this verification, Actalis will normally rely on a suitable representation from the Contract Signer, based on a template provided by Actalis, which must be signed according to section 4.1.2.

3.2.6 Criteria for interoperation

The CA shall disclose all cross certificates that identify the CA as the Subject, provided that the CA arranged for or accepted the establishment of the trust relationship.

3.3 Identification and authentication for re-key requests

3.3.1 Identification and authentication for routine re-key

Re-keying a certificate may routinely occur in two cases:

[4] One such service is the Italian "Posta Elettronica Certificata" (PEC).

- when a Subscriber wishes to replace an existing certificate with a new one (with same or different details) containing a different key; or
- when a Subscriber wishes to renew a certificate that is about to expire, that is, obtain a new certificate with the same details of the one that is about to expire; in this case, the CA requires that the new certificate contains a new key.

In both cases, the CA may request the Subscriber to pass the same identification and authentication procedures used for the initial certificate issuance, depending on the age of the validation data used for the initial certificate issuance (in view of the requirements set forth in [BR] and [EVGL]) and on the request channel.

3.3.2 Identification and authentication for re-key after revocation

After a certificate has been revoked, the Subscriber wishing a new certificate must generate a new key pair and follow all the normal identification and authentication procedures as in the initial certificate issuance.

3.4 Identification and authentication for revocation requests

See section 4.9.3.

4 Certificate management operational requirements

4.1 Certificate application

4.1.1 Who can submit a certificate application

Either the Applicant (i.e., the future Subscriber) or a natural person authorized to request certificates on behalf of the Applicant (i.e., an Applicant Representative) may submit certificate requests, in compliance with the requirements described in par. 3.2.5

Actalis maintains an internal database of all previously revoked certificates and previously rejected certificate requests due to suspected phishing or other fraudulent usage or concerns. Actalis uses this information to identify subsequent suspicious certificate requests.

4.1.2 Enrollment process and responsibilities

The certificate enrollment process includes the following mandatory steps:

- generating a suitable key pair;
- submitting to Actalis a certificate application form;
- delivering to Actalis the public key of the key pair;
- agreeing to and/or signing the applicable Subscriber Agreement;
- paying the applicable fees (depending on certificate class, type, etc.).

All the above steps are the responsibility of the Applicant, except for the Payment which may possibly be made by another entity.

The order and the exact way in which these steps are carried out may vary, depending on chosen request channel, but all the steps have to be completed (with the possible exception of the payment which can be deferred, depending on the customer and the amount due, subject to approval by Actalis' sales department) *before* the certificate request is taken charge of by the CA.

For DV and OV TLS Server certificates, the following Applicant roles are required, as defined in the [BR], and enforced within the enrollment process:

- Applicant
- Applicant Representative

For EV TLS Server certificates, the following additional Applicant roles are required, as defined in the [EVGL], and enforced within the enrollment process:

- Certificate Requester
- Certificate Approver
- Contract Signer (the natural person who signs the Subscriber Agreement EV - see below)

The Applicant may authorize one individual to occupy two or more of the above roles, and/or may authorize more than one individual to occupy any of these roles.

The certificate request is normally made through the submission of an online form (web form) on the website of the CA itself or on the website of a Reseller. In special cases where this method cannot be followed, you can submit an off-line application form (e.g., via email) to the CA (available on the CA portal).

Enterprise RAs can request certificates via a specific web-based application hosted by Actalis.

The certificate application always includes the following information:

- type, class, and duration (validity) of the requested certificate;
- for TLS Server certificates, FQDN(s) and/or IP address(es) to be included in the certificate;
- (except for DV TLS Server certificates) value of the proposed Subject DN;
- name and contact details of one or more Technical Contacts.

Only for OV and EV-class certificates, the following information must also be provided:

- details of the Applicant organization (official name, registration number, address, etc.);
- name and contact details of a suitable Organizational Contact.

The certificate application includes, as a mandatory step, the Applicant's express acceptance of a Subscriber Agreement (also named "Terms and Conditions") that includes this CPS by reference. Depending on the certificate class and the particular application procedure or channel, the Applicant may agree these terms in different ways, such as:

- by "point and click" on a web form (in conformance to European legislation on distance contracts);
- by expressly confirming acceptance in writing to Actalis (possibly via email);
- by a hand-written signature,
- by a digital signature.

When an actual signature is required, it must be made by a suitably authorized person.

EV Certificate requests must be submitted by an authorized Certificate Requester and approved by a suitable Certificate Approver according to the [EVGL]. The certificate request must be accompanied by a dedicated signed Subscriber Agreement from a suitable Contract Signer according to the [EVGL]. The EV Subscriber Agreement must be signed in one of the following ways:

- by a handwritten signature made before an Actalis representative (who counter-signs as a witness, after checking the identity of the signatory by examining a valid identity document of the same and keeping a scan thereof);
- by a handwritten signature with a copy of a valid government-issued photo ID of the signatory; in this case, the original handwritten document and the copy of the government ID must be sent to Actalis by e-mail, from an e-mail address related to a domain under control of the Applicant, then sent to Actalis by post;
- by a handwritten signature authenticated by a notary or another person whose commission under applicable law includes authority to authenticate the execution of a signature on a document; (*)
- by a valid *qualified electronic signature* compliant with European regulations.

(*) In this case, the authenticated copy of the Subscriber Agreement must be sent to the CA in original. The certificate request will not be processed until Actalis has received and verified such original.

Before accepting the Subscriber Agreement, the Applicant or Applicant Representative is supposed to review all aspects of the Actalis' CA service by reading the documentation published on the CA web site.

The certificate application form and the Subscriber Agreement are available in Italian and English language. Actalis does not commit to support other languages.

The certificate application form must be accompanied or followed by a suitable Certificate Signing Request file (CSR) conformant to section 3.2.1.

4.1.2.1 ACME Support

Actalis also supports the ACME automation protocol, in compliance with RFC 8555. The Actalis ACME server is exposed at the following URL: https://acme-api.actalis.com/acme/directory.

In general, it is possible to request any type of TLS certificate (DV, OV, EV) from Actalis via ACME, with possible limitations depending on the type of customer account (e.g. retail or corporate).

Access to the Actalis' ACME service requires External Account Binding (EAB) credentials, which are provided during customer onboarding or in self-service mode depending on the type of certificate management portal used by the Subscriber.

Currently, the "http-01", "dns-01" and "dns-persist-01" challenge types are supported for certificates requested through ACME.

The following additional ACME features are also supported:

- CAA records with "accounturi" and "validationmethods" attributes, as per RFC 8657;
- ACME Renewal Information (ARI), in compliance with RFC 9773.

For each applicable CA/Browser Forum TLS Baseline Requirements certificate policy OID for which Actalis offers automated issuance, Actalis discloses the relevant automation solution in CCADB. Where ACME is supported for such policy OID, Actalis discloses the applicable ACME directory endpoint in CCADB.

For the applicable TLS Baseline Requirements certificate policy OIDs, Actalis maintains Automation Test Certificates to demonstrate its automation capabilities and renews them at least every thirty (30) calendar days, making at least one valid Automation Test Certificate available at a publicly accessible URL disclosed in CCADB for the corresponding intermediate CA record.

4.2 Certificate application processing

4.2.1 Performing identification and authentication functions

Upon receipt of a certificate application, all the verifications previously described (see chapter 3 and the previous sections of chapter 4) are performed either automatically, to the extent that is possible and allowed, and/or by a Validation Specialist when necessary or mandatory, in compliance with the [BR] and [EVGL] according to certificate type and class.

Depending of the age and applicability of the already available validation data, the CA may re-use previous validations (documents, data, etc.) for additional certificates to be issued to the same Applicant, to the extent that is permitted by the [BR] and [EVGL] according to certificate type and class.

The CA also checks that the information contained in the CSR (e.g. Subject DN, FQDNs and/or IP addresses) are consistent with those supplied in the certificate application form and with the type of certificate requested, and rejects the request in case of conflicts or anomalies.

The CA also checks the relevant CAA records (if any) according to paragraph 3.2.2.8. The domain identifier to be used in the CAA records to authorize the Actalis CA is "actalis.it".

For EV TLS Server certificates, Actalis enforces the principle of Separation of Duties to ensure that no one person can single-handedly validate and authorize the issuance of an EV Certificate, in compliance with section 5.2.4 of the [EVGL]. In particular, the “Final Cross-Correlation and Due Diligence” (see section 3.2.2.13 of EVGL) is carried out by a different Validation Specialist than the one(s) who performed the previous validation steps.

Once the essential I&A steps are successfully completed, the CA will normally send to the Applicant Representative, via email, the authentication credentials needed to login to the CA portal, for the possible submission of revocation requests.

4.2.2 Approval or rejection of certificate applications

Approval of certificate applications requires successful completion of all validation steps described above, in full compliance with the CA’s policies. When processing CAA records, Actalis processes the *accounturi* and *validationmethods* parameters in accordance with RFC 8657.

Acceptance of applications is also subject to the following criteria:

- Certificates containing “internal names” or reserved IP address will not be issued.
- Certificates containing a new gTLD under consideration by ICANN will not be issued.
- Certificates for domains with “.onion” in their right-most label will not be issued.
- Certificates containing Domain Names that end in an IP Reverse Zone Suffix, as defined in the [BR], will not be issued.
- Actalis maintains a list of domains at high risk of phishing. Applications for certificates containing those domains are placed on hold pending additional checks, during which the Applicant is required to provide further information confirming its actual right to use the domains concerned. Issuance is permitted only upon successful completion of those checks; otherwise, the application is rejected.

4.2.3 Time to process certificate applications

No stipulation.

4.3 Certificate issuance

4.3.1 CA actions during certificate issuance

If the previous steps (see section 4.2) are completed successfully, the CA system:

- checks that the CSR is well-formed and does not contain unexpected data;

- checks that the CSR is cryptographically valid according to section 3.2.1;
- checks that the key found in the CSR is not a known "weak key" (see CVE-2008-0166);
- performs a linting of *tbsCertificate,* using linters broadly adopted by the industry, in order to minimize the risk of incorrect issuance;
- checks the relevant CAA Records (if any) according to section 3.2.2.8 of the [BR].

If all the above checks are successful, the CA generates the certificate, stores it into its database, and eventually:

- sends to the Applicant an e-mail containing the Subscriber certificate (or a link to it) and the suitable certificate chain (or a link to it);
- and/or makes the certificate available to the Applicant on the web portal through which the certificate was requested;
- and/or makes the certificate available to the Applicant or to the Reseller through the applicable APIs, (depending on the request channel);

All of the above operations are performed automatically for Subscriber certificates, normally.

In case of a Subordinate CA certificate, however, the certificate issuance requires a suitably authorized individual (i.e., the CA system operator, system officer, or PKI administrator) to deliberately issue a direct command in order for the Root CA to perform the certificate signing operation.

All TLS Server certificates must comply with the applicable Certificate Transparency requirements under the [CT] specification. When a certificate is about to be issued, a precertificate is first generated and submitted to an appropriate number of qualified CT Logs, based on the applicable browser vendors' CT Policies (Google, Mozilla, Microsoft and Apple). Each CT Log returns a Signed Certificate Timestamp (SCT) as evidence of inclusion in the log. Only then is the final certificate generated, with the SCTs embedded as an extension (OID 1.3.6.1.4.1.11129.2.4.2).

4.3.2 Notification to subscriber by the CA of issuance of certificate

The Subscriber will normally be notified via email of the successful issuance of the certificate, either by the CA directly or by an RA and/or Reseller where applicable, provided that the email address supplied to the CA for that purpose by the Applicant Representative or Certificate Requester is valid.

4.4 Certificate acceptance

4.4.1 Conduct constituting certificate acceptance

The CA intends the certificate as accepted after 30 days from the date of delivery, as attested by the date of the electronic mail message sent to the Subscriber, barring any notice to the contrary from the Subscriber.

Public use of the certificate (i.e., its installation on a website with public access), even if temporary, shall in any case imply acceptance of the certificate by the Subscriber.

In the event that the certificate is issued with incorrect information in it due to incorrect completion of the application form by the requestor, the certificate must nonetheless be paid for.

4.4.2 Publication of the certificate by the CA

As regards Root CA and Subordinate CA certificates, see paragraph 2.2

No stipulation as regards Subscriber certificates.

4.4.3 Notification of certificate issuance by the CA to other entities

Actalis publishes the issuance data of all TLS Certificates in the form of a Precertificate, to Certificate Transparency (CT) logs, in compliance with RFC 6962 and any applicable Browsers' root programs policies.

4.5 Key pair and certificate usage

4.5.1 Subscriber private key and certificate usage

The Subscriber shall use the private key to activate the TLS/SSL protocol on their own servers, thereby allowing TLS server authentication and session encryption of the transactions with clients.

4.5.2 Relying party public key and certificate usage

The relying parties shall use the certificate to verify the identity of a server and (depending on certificate class) the organization which controls the server, as well as to exchange the "session key" safely with the server.

See also paragraph 1.4.

4.6 Certificate renewal

Renewal of a certificate means the issuing of a new certificate containing the same Subject identifying information (according to the certificate class) and the same domains and IP addresses (according to the type of certificate) that are found in a certificate already issued and not yet expired or revoked.

The CA makes a reasonable effort to inform the Subscriber about the forthcoming expiration of their certificates, by periodically sending emails to the Technical Contact. The warning emails are sent, normally, starting from 30 days before the expiry of the certificate.

4.6.1 Circumstance for certificate renewal

Same as described in par. 4.1.1.

4.6.2 Who may request renewal

Same as described in par. 4.1.2.

4.6.3 Processing certificate renewal requests

Same as described in par. 4.1.3.

4.6.4 Notification of new certificate issuance to subscriber

Same as described in par. 4.1.4.

4.6.5 Conduct constituting acceptance of a renewal certificate

Same as described in par. 4.1.5.

4.6.6 Publication of the renewal certificate by the CA

Same as described in par. 4.1.6.

4.6.7 Notification of certificate issuance by the CA to other entities

Same as described in par. 4.1.7.

4.7 Certificate re-key

Certificate re-keying implies the issuance of a new certificate, with a new public key and a new serial number, but with the same Subject information found in the current certificate, provided this latter is not expired or revoked (otherwise, the normal first-issuance procedures are followed).

4.7.1 Circumstance for certificate re-key

Key regeneration is a mandatory step if certificate renewal is required, but may also be required following the compromise of the current key or for other reasons at the discretion of the CA.

4.7.2 Who may request certification of a new public key

Certificate re-keying may be requested by the Subscriber, or by an RA, or by the CA, depending on circumstances.

4.7.3 Processing certificate re-key requests

Normally, the procedure for processing a key regeneration request is the same as in the new certificate issuance case. If the evidences previously collected during the I&A phase (see section 3.2) are still valid, the CA can process the request without necessarily redoing I&A; in this case, an authenticated request by the Subscriber is sufficient.

4.7.4 Notification of new certificate issuance to subscriber

Same as described in par. 4.3.2.

4.7.5 Conduct constituting acceptance of a re-keyed certificate

Same as described in par. 4.4.1.

4.7.6 Publication of the re-keyed certificate by the CA

Same as described in par. 4.4.2.

4.7.7 Notification of certificate issuance by the CA to other entities

Same as described in par. 4.4.3.

4.8 Certificate modification

Certificate modification implies issuing a new certificate to the same Subscriber, with the same or a different public key, but with different identification information (e.g. parts of Subject or SubjectAlternativeNames) than are found in the old certificate.

4.8.1 Circumstance for certificate modification

When the old certificate contains incorrect information due to errors committed by the CA or RA, that incorrect certificate will be revoked and a correct one will be issued without additional charges for the customer.

When the old certificate contains incorrect information due to errors committed by the Applicant (e.g. incorrect inputs in one or more fields of the request form), that incorrect certificate will be revoked and the Subscriber may request a new certificate.

4.8.2 Who may request certificate modification

Certificate modification may be requested by the Subscriber, or by an RA, or by the CA, depending on the case.

4.8.3 Processing certificate modification requests

Normally, the procedure for modifying a certificate is the same as for issuing a new certificate. Depending on the case, a new I&A (see Section 3.2) may be necessary, either complete or partial.

4.8.4 Notification of new certificate issuance to subscriber

Same as described in par. 4.3.2.

4.8.5 Conduct constituting acceptance of modified certificate

Same as described in par. 4.4.1.

4.8.6 Publication of the modified certificate by the CA

Same as described in par. 4.4.2.

4.8.7 Notification of certificate issuance by the CA to other entities

Same as described in par. 4.4.3.

4.9 Certificate suspension and revocation

The suspension of the certificate determines a temporary suspension of the validity of a certificate, starting from a given moment in time (date/time). Once a certificate has been suspended, it can be re-activated at any time. Suspension is not supported for certificates issued under this CPS.

Revocation determines the premature termination of the validity of a certificate, starting from a given moment in time (date/time). Revocation of a certificate is irreversible.

Implementation of revocation consists in the generation and publication of a new CRL (Certificate Revocation List) that includes the serial number of the revoked certificate, and update of the OCSP responder database (see section 4.10 for more details on certificate status services).

4.9.1 Circumstances for revocation

4.9.1.1 Reasons for Revoking a Subscriber Certificate

The CA shall revoke a certificate **within 24 hours** if one or more of the following events occurs:

1. the Subscriber requests in writing that the CA revoke the certificate;
2. the Subscriber notifies the CA that the original certificate request was not authorized and does not retroactively grant authorization - (CRLReason #9, *privilegeWithdrawn*);
3. the CA obtains evidence that the Subscriber's private key (corresponding to the public key in the certificate) has suffered a key compromise - (CRLReason #1, *keyCompromise*);
4. The CA obtains evidence of a demonstrated or proven method that can readily derive the Subscriber's private key from the corresponding public key data contained in the certificate (CRLReason #1, *keyCompromise*);

5. the CA obtains evidence that validation of authorization or control of any FQDN or IP address contained in the certificate cannot be considered reliable, including cases where the CA did not properly perform the CAA check or issuance was not permitted (CRLReason #4, *superseded*).

The CA shall revoke a certificate **within 5 days** if one or more of the following events occurs:

6. the certificate no longer complies with the requirements of Sections 6.1.5 and 6.1.6 of the [BR] or with others applicable policies and/or standards - (CRLReason #4, *superseded*);
7. the CA is made aware that the certificate was misused (e.g., for unlawful purposes) - (CRLReason #9, *privilegeWithdrawn*);
8. the CA is made aware that the Subscriber has violated one or more of its material obligations under the Terms & Conditions of the service and/or this CPS - (CRLReason #9, *privilegeWithdrawn*);
9. the CA is made aware that use of a FQDN or IP address in the certificate is no longer legally permitted (e.g., national or international court or arbitrator has revoked a domain name registrant's right to use the domain name or applied specific sanctions to registrant, the domain name registrant has failed to renew the domain name, etc.) - (CRLReason #5, *cessationOfOperation*);
10. the CA is made aware that a wildcard certificate has been used to authenticate a fraudulently misleading subordinate FQDN - (CRLReason #9, *privilegeWithdrawn*);
11. the CA is made aware of a material change in the information contained in the certificate - (CRLReason #9, *privilegeWithdrawn*);
12. the CA is made aware that the certificate has any non-compliance with this CPS and/or with the [BR] requirements and/or the [EVGL] guidelines (where applicable), regardless of the impact of such non-compliance on the security and/or the correct working of the certificate – (CRLReason #4, *superseded*);
13. the CA determines that any of the information appearing in the certificate is inaccurate or misleading (e.g., the Subscriber organization no longer exists, or is indicated ambiguously in the certificate) - (CRLReason #9, *privilegeWithdrawn*);
14. the CA's right to issue certificates under the [BR] expires or is revoked or terminated, unless the CA has made arrangements to continue maintaining the CRL/OCSP repository – (CRLReason omitted);
15. The CA obtains evidence of a method that exposes the Subscriber's private key to compromise, or discovers that the key generation procedure used by the Subscriber is seriously flawed and insecure - (CRLReason omessa);
16. compromise of the private key of the subordinate CA used for issuing the certificate - (CRLReason #1, *keyCompromise*);
17. breach of contract by the client (e.g., failure to pay for the certificate) - (CRLReason #9, *privilegeWithdrawn*);
18. a court order to revoke the certificate - (CRLReason #9, *privilegeWithdrawn*).

If an EV certificate is requested, by means of a handwritten signature, the CA will revoke the certificate for the following circumstances:

- failure to send, within 30 days from the issue of the certificate, the original documentation together with the copy of the government ID;
- incorrectness of the documentation compared to the original copy sent in advance by e-mail.

Before revoking a certificate, the CA will make a reasonable effort to warn to the affected Subscriber of the imminent revocation, compatibly with the maximum revocation times indicated above. However, the CA shall immediately revoke the certificate *without a prior notice* in the following cases:

- the certificate is being used for any kind of criminal activity (e.g., "phishing" attacks, "man-in-the-middle" attacks, malware distribution, etc.);
- the certificate was erroneously issued with CA = TRUE in its KeyUsage extension.

4.9.1.2 Reasons for Revoking a Subordinate CA Certificate

Actalis shall meet the requirements set forth in section 4.9.1.2 of the [BR].

Actalis will revoke a SubCA certificate within 7 days if one or more of the following circumstances occurs:

1. the SubCA requests revocation of the certificate in writing;
2. the SubCA notifies Actalis that the original request for the SubCA certificate was not authorized and does not retroactively grant such authorization;
3. Actalis obtains evidence that the SubCA's private key corresponding to the public key in the certificate has been compromised or no longer meets the security requirements set out in sections 6.1.5 and 6.1.6;
4. Actalis obtains evidence that the SubCA certificate has been misused;
5. Actalis becomes aware that the SubCA certificate was not issued in accordance with the CA/Browser Forum Baseline Requirements and other applicable requirements, including this CP/CPS;
6. Actalis determines that any information in the SubCA certificate is inaccurate or misleading;
7. Actalis or the SubCA ceases operations for any reason without having made arrangements to ensure the continuity of the certificate revocation service;
8. the right of Actalis or the SubCA to issue Certificates under the Baseline Requirements and other applicable regulatory requirements expires, is revoked or otherwise terminates entirely, unless Actalis has already made suitable arrangements to ensure the continuity of CRL/OCSP repository management;
9. revocation is required by the applicable Actalis CP/CPS.

4.9.2 Who can request revocation

Revocation can be requested by (depending on circumstances):

- the Subscriber;
- the issuing Certificate Authority;
- the Registration Authority;
- a court of law.

Additionally, Subscribers, Relying Parties, Application Software Suppliers, and other third parties may submit Certificate Problem Reports (in accordance with the circumstances described in Section 4.9.1 and in the manner described in Section 1.5.2.) informing the issuing CA of reasonable cause to revoke the certificate.

Under certain circumstances the Subscriber *must* request revocation of its certificate (see §9.6.3).

4.9.3 Procedure for revocation request

Requests for revocation can be submitted directly to the CA, through the CA portal. In the event that the certificate was provided through a reseller or through an RA, revocation of the certificate may also be requested through the reseller or RA. In any case, before revocation of a certificate can be requested, it is necessary to authenticate to the relevant web site / service with the credentials that were provided to the Subscriber for that purpose at the time of certificate issuance.

As an alternative, it is possible to fill out a revocation request form (downloadable from the Actalis' web site), signed by the Subscriber. The signed form must then be sent directly to the CA (e.g., via ordinary mail, or rather e-mail). Before carrying out the revocation, the CA will check that the request is authentic. Revocation requests submitted to the CA in this way are handled on working days only.

To programmatically revoke one or more certificates issued by Actalis via ACME, for which you have the corresponding private key or the key of the associated ACME account, you can use the ACME revokeCert method at this endpoint: https://acme-api.actalis.com/acme/revokecert.

For revocation requests submitted on-line, certificates shall be revoked within 24 hours.

Regardless of whom requested the certificate revocation, the CA shall normally inform the Subscriber about the effected revocation via an e-mail message sent to the "technical contact" specified in the application form.

4.9.4 Revocation request grace period

There is no grace period associated with certificate revocation requests. The Subscriber is expected to request revocation of its certificate as soon as circumstances requiring revocation (see §4.9.1) are confirmed.

4.9.5 Time within which CA must process the revocation request

Properly authenticated revocation requests received from Subscribers are processed within 24 hours provided that the request is made with the expected on-line procedure (see section 4.9.3).

In case of certificate problem reports that may require revocation (as described at 1.5.2), investigation on the alleged problem will begin within 24 hours of receiving the problem report. Once decided that certificate revocation is warranted, it will be carried out within 24 hours.

4.9.6 Revocation checking requirement for relying parties

See section 9.6.4.

4.9.7 CRL issuance frequency

See paragraph 4.10.1.

4.9.8 Maximum latency for CRLs

CRLs are published right after having been generated. The latency between generation time and publication time may depend on the load of the CA's processing systems; it is typically a few minutes and does not exceed 60 minutes.

4.9.9 On-line revocation/status checking availability

Actalis supports an OCSP service for all Certificates and Pre-certificates that have been allocated a serial number, in compliance with §4.9.9 of the [BR].

Actalis' OCSP responders support the HTTP GET method, as described in RFC 6960 and/or RFC 5019.

The OCSP service is available from 15 minutes after the serial number assignment.

OCSP responses related to Subscriber certificates have a validity interval equal to or greater than eight hours and equal to or less than ten days.

In all other respects, Actalis' OCSP Service fully complies with §4.9.9 of the [BR].

4.9.10 On-line revocation checking requirements

See sections 4.10 and 7.3.

4.9.11 Other forms of revocation advertisements available

Actalis allows for OCSP stapling.

4.9.12 Special requirements related to key compromise

No particular requirement in case of key compromise detected by the Subscriber. In this case, the Subscriber is supposed to promptly request Actalis to revoke their certificate (see section 9.6.3).

Subjects *other* than the Subscriber can report the compromise of the key of an Actalis certificate (not expired and not revoked) using one of the following methods to demonstrate that they possess or control the private key in question:

- Create a text file containing the phrase "This key is compromised" (or a similar phrase), then sign the file with the private key that you want to report as compromised and send the signed file to Actalis (§).
- Create, with the private key that you want to report as compromised, a CSR that includes the text "This key is compromised" (or a similar phrase) in the commonName, then send the CSR to Actalis (§).
- Send to Actalis (§) the private key that you want to report as compromised. However, this method is *not recommended for safety reasons*.
- Send to Actalis (§) references to sources of information on vulnerabilities and/or security incidents that allow to verify the compromise.

(§) Send to cert-problem@actalis.it specifying "Key compromise" as the subject.

Actalis may, at its discretion, also allow other methods to demonstrate possession or control of a private key.

4.9.13 Circumstances for suspension

Not applicable.

4.9.14 Who can request suspension

Not applicable.

4.9.15 Procedure for suspension request

Not applicable.

4.9.16 Limits on suspension period

Not applicable.

4.10 Certificate status services

In general, the status of certificates (active or revoked) is made available to all interested parties via:

- the publication of Certificate Revocation Lists (CRL);
- the provision of an OCSP (On-line Certificate Status Protocol) service.

4.10.1 Operational characteristics

The CRL is accessible:

- via HTTP in accordance with [RFC2616]

The CRL addresses (URLs) are included in the certificate's CRLDistributionPoints extension.

The CRL is regenerated in full and republished:

- at least every 6 hours, even if there are no new revocations;
- within 24 hours of each new revocation.

The OCSP responder address (URL) is included in the certificate's AuthorityInformationAccess extension.

The CRL and OCSP services are freely accessible to anyone.

The ARL, i.e. the list of SubCA certificates revoked by the Root CA, is updated and published:

- at least every 3 months, even if there are no new revocations;
- within 24 hours of each new revocation.

4.10.2 Service availability

Access to the CRL and OCSP service is continuously available (24 x 7), except in the event of failures or other unforeseen circumstances. See also section 9.17.1.

4.10.3 Optional features

No stipulation.

4.11 End of subscription

The contract between the CA and the Subscriber ends when the Subscriber's certificate expires or is revoked, whichever comes first.

4.12 Key escrow and recovery

4.12.1 Key escrow and recovery policy and practices

Not applicable.

4.12.2 Session key encapsulation and recovery policy and practices

Not applicable.

5 Facility, management, and operational controls

For the management of its CA infrastructure, Actalis makes use of the data center services provided by its holding company, Aruba S.p.A., who takes responsibility for the housing, Internet connectivity, physical and network security of all Actalis' systems. The data center service provided is ISO/IEC 27001 certified.

5.1 Physical controls

5.1.1 Site location and construction

All computer systems used for the provision of Actalis' CA services are housed in highly secure data centers owned and managed by the Actalis' holding company, Aruba S.p.A. In particular, Actalis maintains at least two full PKI infrastructures at separate locations, for redundancy, plus a third one at a distant location (> 300 km), for disaster recovery purposes. All these data centers are located on the Italian territory.

5.1.2 Physical access

At all the CA facilities, the following controls are in place:

- physical **access control system**, so that access to the facility is possible only to those who need, upon registration at the reception, and that access to the technical rooms is allowed only to authorized employees;
- **passive anti-intrusion systems** such as grids, bulletproof glass, armored doors, motorized gates;
- **active anti-intrusion systems** such as CCTV and VMD.

5.1.3 Power and air conditioning

All data centers hosting Actalis' CA services are equipped with:

- fully redundant power supply systems, to guarantee the continuity of electric power supply in every predictable condition;
- ventilation and air conditioning systems (HVAC) to ensure optimal climatic conditions for the regular operation of servers hosted in the data center.

5.1.4 Water exposures

All data centers hosting Actalis' CA services are equipped with flood detection and protection systems.

5.1.5 Fire prevention and protection

All the data centers hosting Actalis' CA services are equipped with fire detection and suppression systems compliant with the applicable laws and standards; fire detectors are also present on all floors of the building. For the details of specific data centers, see par. 5.1.1.

5.1.6 Media storage

The procedures established by Actalis' ISMS apply to media storage.
Media are kept in secure environments and protected against unauthorized access, including during temporary storage prior to disposal. When media are reused or decommissioned, secure data erasure and/or physical destruction is performed, depending on the type and condition of the media, to prevent data recovery by unauthorized parties. These activities are tracked and their results documented; any transfers of media are authorized and subject to specific security measures

5.1.7 Waste disposal

The CA manages waste disposal in accordance with applicable legislation, with particular attention to waste electrical and electronic equipment (WEEE). For activities carried out at Aruba data centers, the procedures of the environmental management system certified to ISO 14001 also apply.

5.1.8 Off-site backup

Backups are stored at a different site than that of data origin, thus ensuring the possibility of restoration in any foreseeable condition.

5.2 Procedural controls

Actalis maintains a Security Plan, including a Risk Assessment, which analyses the CA assets, the threats they are exposed to, and describes the various technical, physical and procedural controls deployed so to adequately mitigate the risks. The risk assessment is reviewed at least yearly.
Furthermore, Actalis has defined an inventory of assets (hardware and software) as required by the policy and the company procedure.

5.2.1 Trusted roles

Actalis has defined and formally assigned the following trusted roles within the CA service regulated by this CPS:

- Security Officer: responsible for implementation and management of security procedures;
- System Administrator: responsible for installation, configuration and maintenance of CA systems;
- System Operator: responsible for the day-to-day operation of CA systems;
- System Auditor: responsible for checking the reviewing record archives and audit logs;
- Internal Auditor: responsible for performing self-audits (see section 8.7) and other assessments;
- Validation Specialist: responsible for performing the information verification duties specified by this CPS (in particular, those described in section 3);
- Registration & Revocation Officer: responsible for verifying the information needed to issue certificates and approving certificate requests; also responsible for certificate status changes (e.g. revocations).

Some persons may hold multiple roles provided that this does not prejudice the security and trustworthiness of the PKI and is not prohibited by applicable regulations and standards.

Trusted roles are appointed by senior management. A list of personnel appointed to trusted roles is maintained and reviewed annually, and made available to auditors.

5.2.2 Number of persons required per task

Management of the CA private keys (key generation, backup, restore, deletion, etc.) requires at least two persons in trusted roles ("dual control") and must take place in a physically protected environment.

Issuance of EV certificates shall require the participation of at least two validation specialists.

5.2.3 Identification and authentication for each role

All the trusted roles listed in par. 5.2.1 and, in general, all the Actalis staff use appropriate identification and authentication systems for accessing Actalis' computer systems.

In particular, with regard to the physical access to data rooms and cabinets that contain the CA systems, identification and authentication takes place by means of restricted access.

As regards the logical access to the CA systems, identification is based on the account name and relative password or through a two-factor authentication system where necessary. In particular, access to any account that allows direct issuance of certificates requires strong authentication (multi-factor).

5.2.4 Roles requiring separation of duties

Persons holding any of the trusted roles listed in par. 5.2.1 cannot have other roles within the CA services, except for Validation Specialists and Registration & Revocation Officers. See also section 5.2.2

5.3 Personnel controls

5.3.1 Qualifications, experience, and clearance requirements

Actalis ensures that the personnel assigned to its CA services are adequately competent for the tasks assigned to them, based on appropriate education, training, skills, and experience, and that they are free from conflicts of interest that may compromise the necessary impartiality and respect of the procedures. In particular, with reference to the trusted roles, the required characteristics and skills are described in the "job description" company document.

In the case of new recruitments, Actalis always reserves the right to assess what type of training is necessary in relation to the tasks to be assigned, the existing qualifications and experience, and provides where necessary for the inclusion of the resource in a training plan.

5.3.2 Background check procedures

For the definition of the shortlist of candidates, both for technical and administrative areas, Actalis uses both the curricula sent directly to it through the appropriate channels (e.g. website) and those provided by external recruiters. For each candidate, the accuracy of the information contained in the CV (e.g. education, masters, specific training courses, etc.) is verified. External recruiters contracted by Actalis also have the obligation to request references, for each potential candidate, before submitting their CVs to Actalis. Furthermore, all candidates, once the selection phase is completed, must provide their certificate of good conduct (extract from the judicial record) or an equivalent declaration to the Human Resources office.

5.3.3 Training requirements

The staff in charge of the CA services is adequately trained for the tasks that they perform. Actalis provides staff with initial training at the time of recruitment, including courses held by external teachers when deemed necessary, and training on the job.

The staff involved in the verification of information (Validation Specialists) are trained on at least the following topics: Public Key Infrastructures (PKI), identification and authentication policies and procedures, common threats to information verification procedures, and CAB Forum Requirements [BR] and Guidelines [EVGL]. The records of this training, which is provided at least yearly, are kept and made available to the auditors on request.

5.3.4 Retraining frequency and requirements

For all personnel working in the CA service, the need for new training is assessed at least once per year (or in advance, in case new developments/services), so as to ensure that all personnel are always able to perform their tasks satisfactorily and competently. Furthermore, training on information security matters is held annually for all staff.

5.3.5 Job rotation frequency and sequence

No stipulation.

5.3.6 Sanctions for unauthorized actions

In the case of unauthorized actions and/or violations of company (or Group) policy and/or procedures, Actalis reserves the right to activate the disciplinary procedure provided for in the employment contract, after having assessed the nature and the severity of the violation and its impact on company operations, whether it was the first occurrence, whether the employee had been adequately trained, etc.

5.3.7 Independent contractor requirements

Any independent contractor or Delegated Third Party's personnel involved in the issuance of Certificates shall be fully subject to this CPS, including training and skills requirements (see section 5.3.3), sanctions (see section 5.3.6), document retention and event logging requirements (see section 5.4.1).

Non-employees (e.g. consultants) are required to sign a confidentiality agreement (NDA) before starting collaboration with Actalis and possibly accessing confidential data.

5.3.8 Documentation supplied to personnel

Personnel in trusted roles are provided with the documentation necessary to perform their duties, depending on their role (see section 5.2.1). In particular, Validation Specialists are provided with this CPS, CAB Forum's Baseline Requirements and EV Guidelines, and detailed instructions on how to properly perform the identification and authentication activities and issue certificates, plus the manuals of the CA/RA applications they use.

5.4 Audit logging procedures

5.4.1 Types of events recorded

The CA and any Delegated Third Parties shall record all the details related to certificate requests, issuances, and subsequent management (e.g. revocation), and make these records available to the CA auditors. For each event, information shall be recorded about event type, date and time of occurrence, the associated data (depending on event type), the personnel involved (if applicable), and possibly other information depending on event type.

At least the following events shall be logged, in line with section 5.4.1 of the [BR]:

- CA key lifecycle management events;
- CA and Subscriber certificate life cycle management events;
- Security events (e.g. accesses to PKI systems, PKI and security system actions performed, security profile changes, entries to and exits from the CA facility, relevant activities on routers and firewalls, in particular with regard to its configurations etc.).

5.4.2 Frequency of processing log

The relevant events are collected by the systems that generate them and are transmitted to the centralized log management system. On the log management system, events are automatically classified and stored locally in order to allow them to be consulted. On a daily basis, local data are copied to the long-term storage system (see Section 5.4.4).

5.4.3 Retention period for audit log

The CA shall retain audit logs for at least 10 years.

5.4.4 Protection of audit log

Audit logs are periodically stored on a remote long-term archival system based on WORM-type (Write-Once, Read Many) or equivalent technology. The “live” copy of the audit log is protected from tampering by multiple security measures.

5.4.5 Audit log backup procedures

The storage where the audit log is archived (see section 5.4.4) is replicated on two data centers hosted in separate facilities.

5.4.6 Audit collection system (internal vs. external)

No stipulation.

5.4.7 Notification to event-causing subject

No stipulation.

5.4.8 Vulnerability assessments

Audit logs are periodically examined for anomalies by personnel in trusted roles. Anomalies indicating possible security breaches are reported and investigated. Security incidents are handled according to section 5.7.1.

Vulnerability assessments of the CA networks and systems are done at least annually by qualified third parties. See also section 6.7.

Penetration tests are performed at least annually and following infrastructure or application changes classified as significant. They are conducted by qualified information security specialists from a Group company dedicated to cybersecurity, who are independent of the personnel responsible for the systems under test and possess appropriate expertise and internationally recognized qualifications (e.g. OSCP, OSCE, eCPPT, CEH or equivalent).

Vulnerabilities identified through vulnerability assessments, penetration tests or other means are reviewed, managed and resolved according to their severity and associated risk, within the following maximum resolution times, which include the identification, analysis, response and remediation phases:

Severity	Maximum resolution time
Critical	5 days
High	30 days
Medium	3 months
Low	1 year

The applicable deadline is determined on the basis of a documented risk and security analysis that considers, where relevant: asset criticality; confidentiality, integrity and availability; regulatory requirements; the likelihood and impact of vulnerability exploitation; dependencies; resources available for remediation; historical data; and the current threat landscape

A comprehensive risk assessment is conducted at least annually (see also section 5.2).

5.5 Records archival

5.5.1 Types of records archived

The CA keeps at least the following information related to the request, issuance and revocation of certificates:

- certificate requests, including CSRs;
- details of applicants and applicant representatives;
- any further documentation supplied by applicants;
- verifications performed by the CA and the results thereof;
- certificate revocation requests.

5.5.2 Retention period for archive

Archived records are kept for at least 10 years past the certificates' expiration or revocation dates.

5.5.3 Protection of archive

Archives are protected from unauthorized modification or destruction by strong security controls. To this end, a document preservation service is used complying with the Italian regulations (Legislative Decree No. 82/2005: "Codice dell'Amministrazione Digitale" and subsequent amendments and additions) and accredited by AgID.

5.5.4 Archive backup procedures

Archives are backed up by the preservation system referred to in paragraph 5.5.3.

5.5.5 Requirements for time-stamping of records

All archived records are time-stamped at the date and time of creation or occurrence, with a date and time reference obtained from a trusted time source (see section 6.8).

5.5.6 Archive collection system (internal or external)

No stipulation.

5.5.7 Procedures to obtain and verify archive information

The retention system referred to in paragraph 5.5.3 allows searching for archived information on the basis of the associated metadata, as well as its recovery and the verification of its integrity.

5.6 Key changeover

5.6.1 Root CA

Actalis maintains a Root CA lifecycle and succession plan for Root CAs used for publicly trusted TLS Server certificate issuance. Such plan takes into account the applicable Root Store Program requirements concerning root CA key material age, dedicated-purpose PKI hierarchies, replacement root inclusion, cross-certification, transition of issuance to replacement hierarchies, and phase-out or removal of trust from legacy Root CA hierarchies.

For TLS Server certificate issuance intended to be publicly trusted, Actalis will transition issuance from legacy or multi-purpose Root CA hierarchies to dedicated TLS Server authentication hierarchies in accordance with the applicable Root Store Program policies, CCADB disclosures, and any approved transition or root inclusion plans. Actalis will not rely on legacy or multi-purpose Root CA hierarchies beyond the applicable Root Store Program lifecycle limits, except where expressly permitted by the relevant Root Store Program.

5.6.2 Subordinate CA

At least once a year before the end of the validity of the current certification key (Subordinate CA key), a new key pair will be generated and the corresponding certificate will be made available to Subscribers and Relying

Parties as described in section 6.1.4. From that moment on, Subscriber certificates and related CRLs will be signed with the new Sub CA key.

The new Subordinate CA certificates will have a maximum validity period of three (3) years[5].

5.7 Compromise and disaster recovery

5.7.1 Incident, compromise and mass revocation handling procedures

The Actalis' Information Security Management System (ISMS), compliant with ISO/IEC 27001, also includes incident and compromise handling procedures. The management of an information security incident is handled by following a multi-stage procedure coordinated by an internal committee (Committee for Security and Crisis Management, later on "Committee") composed of figures of various responsibilities and members of the senior management. The process is articulated into several phases described below:

- Detection: phase in which any person (employee, collaborator or any interested party) who detects a possible incident communicates it to the Committee. The Committee ensures that the report is as detailed as possible and that those who have encountered the problem do not take any action autonomously.
- Identification and analysis: the Committee takes charge of the report and assesses whether it is actually a security incident. If so, it evaluates its severity and proceeds with the following phases. Otherwise, it just closes the incident.
- Containment: in this phase, the harmful effects caused by the incident are contained as much as possible, in order to prevent them from spreading to other areas of the organization.
- Collection of evidence: phase in which the evidence is sought for and collected in order to attach it to the documentation of the incident in case of possible legal consequences or for the need to proceed with more in-depth investigations. All the evidences are collected following guidelines which aim to guarantee a correct and reliable collection.
- Removal and Recovery: phase in which the cause of the damage is removed and the systems affected are reactivated, through the recovery procedures, allowing the systems and users to return to work.
- Incident closure and Notification: once the recovery phase is over, the incident is closed. In this phase, the incident closure is notified to the involved managers.

Actalis publicly discloses and/or respond to incident reports in Bugzilla (https://bugzilla.mozilla.org/), regardless of perceived impact. Reports are submitted in accordance with the current version of the CCADB incident report format and timelines.

Actalis responds to requests for additional information from Root Store Programs within the applicable time limits, including within fourteen (14) calendar days for Chrome Root Program requests unless a different period is specified.

If Actalis is unable to complete a required incident follow-up action, including certificate revocation, within the required timeframe, Actalis files a secondary incident report describing the affected certificates, the expected completion timeline, and the corrective actions intended to ensure future compliance.

[5] Starting June 2026.

Where required by an applicable Root Store Program policy, Actalis provides advance notification of material procurements, sales, changes of ownership or operating control, cessations of operations, changes to delegated third parties, changes to operational locations, or other change control events that may materially affect the ongoing operations or perceived trustworthiness of an included Root CA Certificate.

Disaster management is regulated by the Actalis' Business Continuity Plan (BCP) which covers all items listed in paragraph 5.7.1 of the [BR]. See also section 5.1.

Actalis also undertakes to maintain a complete and actionable plan for mass-revocation events, carrying out annual tests of the plan and incorporating the lessons learned in order to continually improve its preparedness for mass revocation over time, in compliance with paragraph 5.7.1.2 of the [BR].

Actalis maintains a comprehensive, actionable mass revocation plan and tests it at least annually. Actalis incorporates lessons learned from such tests and from actual revocation events into its procedures.

Actalis proactively informs Subscribers of applicable revocation timelines and of the risks associated with using publicly trusted TLS Certificates in environments where timely certificate replacement cannot be tolerated. Actalis requires Subscribers, through the applicable Subscriber Agreement or Terms and Conditions, to cooperate in a timely manner with Actalis so that Actalis can meet its revocation obligations under the CA/Browser Forum requirements and applicable Root Store Program policies.

If Actalis determines that delayed revocation is necessary or has occurred, Actalis handles and discloses the matter in accordance with the applicable CCADB Incident Reporting Guidelines and applicable Root Store Program policies.

5.7.2 Computing resources, software, and/or data are corrupted

Actalis implements a Business Continuity Plan for the CA service in order to ensure that the corruption or loss of one or more computers cannot cause any disruption to the CA platform. In particular, all the critical components of the system are redundant both locally, in the single data center, and between the primary and secondary data centers. Actalis also implements specific backup plans to guarantee that there is no loss of software and/or data.

5.7.3 Entity private key compromise procedures

The CA's private key is the single most critical resource of the CA; as such, it is protected by a set of multi-layered security measures, as other critical CA resources. In case of compromise (loss of confidentiality) of the CA key, after assessment of the incident, Actalis will execute the following plan (not necessarily in this order):

- notify the national supervisory body (AgID);
- notify the conformity assessment body (CAB);
- publish a well-visible information note on the CA website;
- notify the Application Software Suppliers with whom Actalis has a Root Certificate distribution agreement in place;
- notify any Delegated Third Parties (DTPs) and other interested parties to the extent possible;
- revoke of all certificates that were issued with the compromised key.

Finally, unless the CA is to be terminated, a new CA key pair will be generated and the new CA public key will be disseminated as described in section 6.1.4.

5.7.4 Business continuity capabilities after a disaster

Actalis are deployed in two geographically distant facilities (see section 5.1), each of which is capable of operating the CA systems independently. In the event that a disaster entirely disables one facility, Actalis' CA operations will fail over to another facility. See also section 5.7.1.

5.8 CA or RA termination

The activities that will be carried out if Actalis decides, for any reason, to cease its certification service are described below.

Before the actual termination:

- at least 60 days before the scheduled termination date, an information note will be sent to all customers of the CA service (and other services that include the CA services), as well as to the supervisory body (AgID), the conformity assessment body (CAB), and other subjects with whom the CA has stipulated agreements in this regard;
- with a minimum notice of 60 days, an informative note will be published on the CA website, in order to make the information available also to Relying Parties;
- with a minimum notice of 60 days, the CA will send a notice to all possible sub-contractors and Delegated Third Parties (RAs), informing them that at the end of the deadline they will no longer be authorized to perform activities related to the certificate issuance service;
- responsibility for retaining evidence (certificate applications, audit logs, etc.) will be transferred to another trustworthy entity capable of ensuring its retention for the period required by applicable regulations, including those of the Italian State. Responsibility for publishing the terminated CA's public key on its website will also be transferred to that entity;
- the destruction of private certification keys as well as of the attached cryptographic material will be planned.

On the termination date:

- the private certification keys as well as the annexed key restoration material (if any) will be destroyed (by logical deletion) and the transaction will be recorded.

6 Technical security controls

6.1 Key pair generation and installation

6.1.1 Key pair generation

6.1.1.1 CA key pair generation

Generation of all CA key pairs (Root CAs and subordinate CAs) takes place in a physically secured environment, following a documented procedure that requires the joint intervention of two different people in Trusted Roles under the principles of "*dual control*" and "*split-knowledge*". All CA key pairs are generated inside HSMs (Hardware Security Modules) meeting the requirements of section 6.2.1. Execution of the procedure is witnessed by an internal auditor and by an independent qualified auditor; the activity is recorded in a report which is archived on the liability of the Director of Certification Services.

6.1.1.2 RA key pair generation

No stipulation.

6.1.1.3 Subscriber key pair generation

For TLS certificates, the Subscriber's key pairs shall be generated by the Subscriber itself.

Actalis shall reject a certificate request for a Public Key that does not meet the requirements set forth in sections 6.1.5 and 6.1.6 or that corresponds to an industry-demonstrated weak Private Key, such as a "Debian weak key" (http://wiki.debian.org/SSLkeys) or one affected by the ROCA (https://github.com/crocs-muni/roca) or the Close Primes (https://fermatattack.secvuln.info/) vulnerabilities.

6.1.2 Private Key delivery to subscriber

See paragraph 6.1.1.3.

6.1.3 Public key delivery to certificate issuer

The Applicant must submit its public key to the issuing CA in the form of a Certificate Signing Request (CSR) conforming to the PKCS#10 standard [RFC2314].

6.1.4 CA public key delivery to relying parties

Root CA public keys are distributed at least in these ways:

- by publication in the CA repository (in the form of self-signed certificates);
- by inclusion in the lists of trusted Root CAs ("root stores") managed and distributed by software suppliers, such as operating system and/or browser vendors;
- via the Trust-service Status List (TSL) that is published on the AgID website.

Subordinate CA (i.e. issuing CA) public keys, in the form of certificates signed by the Root CA, are provided to Subscribers, together with the Subscriber certificate, and are published in the CA repository.

6.1.5 Key sizes

Root CAs shall use an RSA key pair with a module size of 4096 bits or an ECDSA key pair with a size of 384 bits.

Subordinate CAs (i.e. issuing CAs) shall use an RSA key pair with a module size of at least 2048 bits or ECSDA key pair with at least of 256 bits.

Subscriber keys shall be either:

- RSA keys with a module size of at least 2048 bits (up to 4096),
- or ECC keys of type NIST P-256 or P-384.

6.1.6 Public key parameters generation and quality checking

Actalis verifies that public keys meet the requirements set out in section 6.1.6 of the [BR].
In particular, for RSA keys, Actalis performs the following checks in accordance with NIST SP 800-89:

- the public exponent is an odd number greater than or equal to 3;
- the public exponent is between 2^16 + 1 and 2^256 – 1;
- the modulus is an odd number, is not a power of a prime number and has no factors smaller than 752.

For ECDSA keys, Actalis verifies key validity using either the ECC Full Public-Key Validation Routine or the ECC Partial Public-Key Validation Routine in accordance with NIST SP 800-56A: Revision 2.

6.1.7 Key usage purposes (as per X.509 v3 key usage field)

The private keys of the Root CAs belonging to the Actalis Certification Authority are used exclusively to sign:

1. Self-signed certificates representing the Root CA itself;
2. SubCA certificates and cross certificates;
3. Certificates for infrastructure purposes, such as certificates associated with administrative roles and certificates for devices used internally for CA operations;
4. Certificates intended for the verification of OCSP responses;
5. Certificate Revocation List (CRL).

6.2 Private Key Protection and Cryptographic Module Engineering Controls

6.2.1 Cryptographic module standards and controls

All CA private keys (both Root CAs and issuing CAs) shall be generated, stored and used only in HSMs (Hardware Security Modules) possessing a security evaluation according to FIPS PUB 140-2 Level 3 (or higher), FIPS PUB 140-3 Level 3 (or higher) and/or Common Criteria (namely ISO/IEC 15408) at EAL 4 or higher.

6.2.2 Private Key (n out of m) multi-person control

See section 5.2.2.

6.2.3 Private Key escrow

Actalis does not escrow its CA private keys to any third parties nor does it provide such a service for Subscriber keys.

6.2.4 Private Key backup

For guaranteeing continuity of service, Actalis keeps encrypted backup copies of its CA keys on removable media. The backup copy is kept in a safe place that is different from the location of the operational copy. Backup and restore procedures require the joint intervention of at least two people ("dual control") in trusted roles.

6.2.5 Private Key archival

No stipulation beyond what is provided for in the [BR].

6.2.6 Private Key transfer into or from a cryptographic module

When CA private keys are transferred between HSMs (e.g., for redundancy or backup purposes) they are encrypted prior to leaving HSMs and unwrapped only inside destination HSMs. CA private keys never exist in plain text form outside of HSMs. Actalis does not generate CA keys for external subordinate CAs.

6.2.7 Private Key storage on cryptographic module

Private Keys corresponding to CA Keys MUST be stored and protected within HSMs certified as specified in section 6.2.1 of this document.

6.2.7.1 Subscriber Private Key protection and verification

For Private Keys corresponding to **TLS certificates**, the requirements in [BR] section 6.2 are applied.

6.2.8 Method of activating private key

CA private keys are only activated by authorized persons, using the mechanisms provided by the HSM manufacturer. Activation data and devices are protected from loss or disclosure to unauthorized people.

Subscribers are responsible for protecting their private keys. Subscribers are supposed to use a strong password or an equivalent authentication method to prevent unauthorized access or use of their private keys.

6.2.9 Method of deactivating private key

CA private keys are de-activated by authorized persons, using the mechanisms provided by the HSM manufacturer.

6.2.10 Method of destroying private key

CA private keys shall be destroyed when they are no longer needed. CA keys are only destroyed by authorized persons in trusted roles, using the mechanisms provided by the HSM manufacturer.

Subscribers shall securely destroy their private keys when they are no longer needed (e.g. when the corresponding certificates expire or are revoked) by suitable methods depending on the type of media where the private keys are stored (e.g. storage media or HSMs).

6.2.11 Cryptographic Module Rating

See section 6.2.1.

6.3 Other aspects of key pair management

6.3.1 Public key archival

See section 5.5

6.3.2 Operational Lifetime of Certificates and Keys

Certificates and private keys shall have a *maximum* operational period according to the following table:

Type	Priv. key usage period	Certificate validity period
Actalis Authentication Root CA	18 years	20 years
Subordinate CA	13 years	15 years
Root CA emesse nel corso del 2025	15 years	25 years
Subordinate emesse nel corso del 2025	No stipulation	10 years
Cross certificates	No stipulation	5 years
Subscriber – DV TLS Server	No stipulation	Max 200 days
Subscriber – OV TLS Server	No stipulation	Max 200 days
Subscriber – EV TLS Server	No stipulation	Max 200 days

See also section 7.1.

6.4 Activation data

Activation data refers to data that are required to activate private keys within HSMs. Examples include, but are not limited to, PINs, passphrases, and fragments of private keys used in a split-knowledge scheme.

6.4.1 Activation Data Generation and Installation

Activation data are generated and used following information security best practices and, where applicable, the procedures provided by the HSM manufacturers.

6.4.2 Activation Data Protection

6.4.2.1 CA keys

Activation data are protected by physical (e.g. storage on removable media), logical (e.g. encryption), and procedural measures (e.g. assignment to persons in trusted roles), in compliance with the company's information security policy and the "dual control" requirement (see par. 6.1.1.1).

6.4.2.2 Subscriber keys

Activation data are protected by the Subscriber so to prevent their disclosure to any unauthorized parties. For further important details on this topic, see paragraph 9.6.3.

6.4.3 Other Aspects of Activation Data

Root CA keys are normally kept in a non-operational state, except when needed for issuing or revoking Subordinate CA certificates or generating CRLs.

6.5 Computer security controls

6.5.1 Specific computer security technical requirements

The computers used in the CA services run operating systems of proven quality and reliability, configured in such a way as to prevent unauthorized and/or improper use of resources (data, applications, communication channels, etc.).

Where possible and where such functionality is not provided by the operating system itself, anti-malware systems are installed in order to mitigate the risk of "infections" and security attacks. Identified vulnerabilities are

reviewed, managed and resolved, including through the installation of recommended security patches, within the maximum times defined in section 5.4.8. These times include the identification, analysis, response and remediation phases and are determined according to severity and associated risk, on the basis of the documented risk and security analysis and the assessment criteria described in that section.

Computers are subject to a "hardening" procedure aimed at removing or disabling unneeded functionalities, in a specific way on each computer according to the role it plays in the infrastructure.

Privileged access to computers (i.e. as " Administrator") is limited to personnel who actually need it and who have been appointed "System Administrator" in compliance with current legislation.

6.5.2 Computer security rating

No stipulation.

6.6 Life cycle technical controls

6.6.1 System Development Controls

The development of software systems used to support the trust services provided by Actalis, including the CA service, be it carried out by Actalis itself or on behalf of Actalis by contractors, respects the company's Quality Management System (QMS), compliant with the UNI EN ISO 9001 standard: 2015.
For software provided by third parties for the execution of its CA activities, Actalis provides for continuous monitoring of software versioning and upgrades in order to guarantee the highest quality of the services offered.

6.6.2 Security Management Controls

Actalis has in place an Information Security Management System (ISMS), compliant with the ISO/IEC 27001 standard, covering all company areas, including those involved in the development and provision of the CA service. Among the other provisions of the ISMS, all equipment and software used for Actalis' trust services (including CA services) is deployed and updated following a documented change management process.

6.6.3 Life Cycle Security Controls

No stipulation.

6.7 Network security controls

Access to the CA on-line hosts is protected by high quality firewalls that guarantee an adequate filtering of the incoming connections and implement intrusion detection functionalities. Before the firewalls, a series of routers that implement suitable ACLs (Access Control List) constitute further protection. All the communication ports of the certification servers that are not used are disabled. Only those ports are active which support the protocols and functions required for the operation and functionality of the service.

In order to strengthen the filter against unwanted communications, the entire certification system is split-up into an external zone, internal zone and a De-Militarized Zone (DMZ). Sensitive systems are deployed on the internal zone and cannot be directly accessed from the external zone.

The Root CA systems are located on networks that are physically separated from all other CA infrastructures.

Actalis performs at least an annual security assessment to verify the possible presence of network vulnerabilities, making use of independent specialists.

Identified vulnerabilities are reviewed, managed and resolved within the maximum resolution times defined in section 5.4.8, based on the risk assessment

Actalis also complies with the requirements of the “Network and Certificate System Security Requirements” published on https://cabforum.org/working-groups/netsec/ .

6.8 Time-stamping

The time reference used by Actalis is based on multiple Stratum 1 GPS sources to ensure a reliable and redundant time reference. The systems involved in certification services are configured to synchronize automatically and continuously with these time sources.

System time is checked and continuously monitored by comparison with the designated time references and independent external time references, to verify the accuracy of the reference used and detect any anomalous or out-of-tolerance deviations.

The infrastructure is configured to maintain time accuracy of less than one second relative to the reference used.

7 Certificate, CRL and OCSP profiles

7.1 Certificate profile

All certificates issued under this CPS conforms to the public specification [RFC5280], which is based on the ITU-T x.509v3 standard (equivalent to ISO/IEC 9594-8:2005) and to the European norms ETSI EN 319-411 and ETSI EN 319 412 (applicable parts).

Unless otherwise requested by the interested parties, qualified certificates according to the eIDAS regulation also comply with the AgID recommendations aimed at fostering the interoperability and use of online services in the Italian context (AgID Determination n.121/2019, and subsequent amendments and additions). Application of the said recommendations is normally declared through the inclusion, in the CertificatePolicies extension (OID 2.5.29.32), of an additional PolicyIdentifier item with value agIDcert (OID 1.3.76.16.6), except where this indication is redundant or inapplicable in view of the requirements of the intended application context.

7.1.1 Version number(s)

All certificates shall be of type X.509 v3.

7.1.2 Certificate content and extensions

All certificates conform to the [RFC 5280] public specification and to the CA/Browser Forum's [BR] and [EVGL] according to certificate type and class.

7.1.2.1 Root CA Certificates

The profile of the Root CA certificate is as follows:

7.1.2.1.1 Legacy hierarchy

Below is the profile of the *multi-purpose* Root CA certificate:

Field	Value
Version	V3 (2)
SerialNumber	1
Signature	sha256WithRSAEncryption (1.2.840.113549.1.1.11)
Issuer	CN = Actalis Authentication Root CA O = Actalis S.p.A./03358520967 L = Milano C = IT
Validity	from September 22, 2011 to September 22, 2030
Subject	CN = Actalis Authentication Root CA O = Actalis S.p.A./03358520967 L = Milano C = IT
SubjectPublicKeyInfo	<RSA public key of 4096 bits>
SignatureValue	<Root CA signature>
Extension	**Value**
Basic Constraints	critical: CA=true
AuthorityKeyIdentifier (AKI)	<not included>
SubjectKeyIdentifier (SKI)	52:D8:88:3A:C8:9F:78:66:ED:89:F3:7B:38:70:94:C9:02:02:36:D0
KeyUsage	critical: keyCertSign, cRLSign
ExtendedKeyUsage (EKU)	<not included>
CertificatePolicies	<not included>
SubjectAlternativeName (SAN)	<not included>
AuthorityInformationAccess (AIA)	<not included>
CRLDistributionPoints (CDP)	<not included>

7.1.2.1.2 New hierarchies

Below are the profiles of the *single-purpose* Root CA certificates:

In the case of RSA keys

Field	Value
Version	V3 (2)
SerialNumber	<includes at least 8 pseudo-random bytes>
Signature	sha512WithRSAEncryption (1.2.840.113549.1.1.13)
Issuer	< Same value as the Subject >

Validity	<25 years>
Subject	CN = Actalis <purpose> Root CA <year> O = Actalis S.p.A. L = Milano C = IT
SubjectPublicKeyInfo	<RSA public key of 4096 bits>
SignatureValue	<Root CA signature>
Extension	**Value**
Basic Constraints	critical: CA=true
AuthorityKeyIdentifier (AKI)	<SHA1- of the public key >
SubjectKeyIdentifier (SKI)	<SHA1- of the public key >
KeyUsage	critical: keyCertSign, cRLSign
ExtendedKeyUsage (EKU)	<not included>
CertificatePolicies	<not included>
SubjectAlternativeName (SAN)	<not included>
AuthorityInformationAccess (AIA)	<not included>
CRLDistributionPoints (CDP)	<not included>

Where <purpose> is, for example, “TLS Server ECC”, “SMIME RSA”, etc., while <year> is the year of creation of the Root CA. For example, the full commonName can be “Actalis TLS Server RSA Root CA 2025”.

In the case of ECC keys

Field	**Value**
Version	V3 (2)
SerialNumber	<includes at least 8 pseudo-random bytes>
Signature	ecdsa-with-SHA384 (1.2.840.10045.4.3.3)
Issuer	< Same value as the Subject >
Validity	<25 years>
Subject	CN = Actalis <purpose> Root CA <year> O = Actalis S.p.A. L = Milano C = IT
SubjectPublicKeyInfo	< ECDSA P-384 public key >
SignatureValue	<Root CA signature>
Extension	**Value**
Basic Constraints	critical: CA=true
AuthorityKeyIdentifier (AKI)	<SHA1- of the public key >
SubjectKeyIdentifier (SKI)	<SHA1- of the public key >
KeyUsage	critical: keyCertSign, cRLSign
ExtendedKeyUsage (EKU)	<not included>
CertificatePolicies	<not included>

SubjectAlternativeName (SAN)	<not included>
AuthorityInformationAccess (AIA)	<not included>
CRLDistributionPoints (CDP)	<not included>

Where <purpose> is, for example, “TLS Server ECC”, “SMIME RSA”, etc., while <year> is the year of creation of the Root CA. For example, the full commonName can be “Actalis TLS Server RSA Root CA 2025”.

7.1.2.2 Subordinate CA Certificates

7.1.2.2.1 Sub CAs for DV-class certificates

The profile of Sub CA certificates is as follows.

7.1.2.2.1.1 Legacy hierarchy

Field	Value
Version	V3 (2)
SerialNumber	<includes at least 8 pseudo-random bytes>
Signature	sha256WithRSAEncryption (1.2.840.113549.1.1.11)
Issuer	CN = Actalis Authentication Root CA O = Actalis S.p.A./03358520967 L = Milano C = IT
Validity	< In accordance with paragraph 6.3.2>
Subject	CN = Actalis Domain Validation Server CA GN O = Actalis S.p.A. L = Ponte San Pietro S = Bergamo C = IT
SubjectPublicKeyInfo	< RSA public key of at least 2048 bits >
SignatureValue	<Root CA signature>
Extension	**Value**
Basic Constraints	critical: CA=true
AuthorityKeyIdentifier (AKI)	< value of the Root CA's SKI extension >
SubjectKeyIdentifier (SKI)	< public key SHA1-digest >
KeyUsage	critical: keyCertSign, cRLSign
ExtendedKeyUsage (EKU)	serverAuth + clientAuth
CertificatePolicies	PolicyOID = 2.5.29.32.0 (anyPolicy) CPS-URI = < HTTP address of this CPS >
SubjectAlternativeName (SAN)	<not included>
AuthorityInformationAccess (AIA)	< HTTP address of OCSP responder >
CRLDistributionPoints (CDP)	< HTTP address to access the ARL >

7.1.2.2.1.2 New hierarchies

Field	Value
Version	V3 (2)
SerialNumber	<includes at least 8 pseudo-random bytes>
Signature	< In accordance with paragraphs 6.1.5 and 7.1.3>
Issuer	< Subject of the issuing Root CA >
Validity	< In accordance with paragraph 6.3.2>

Subject	CN = Actalis Domain Validated <purpose> CA <year> O = Actalis S.p.A. L = Ponte San Pietro S = Bergamo C = IT
SubjectPublicKeyInfo	< In accordance with paragraphs 6.1.5 and 7.1.3>
SignatureValue	<Root CA signature>
Extension	**Value**
Basic Constraints	critical: CA=true
AuthorityKeyIdentifier (AKI)	< value of the Root CA's SKI extension >
SubjectKeyIdentifier (SKI)	< public key SHA1-digest >
KeyUsage	critical: keyCertSign, cRLSign
ExtendedKeyUsage (EKU)	serverAuth
CertificatePolicies	PolicyOID = 2.5.29.32.0 (anyPolicy) CPS-URI = < HTTP address of this CPS >
SubjectAlternativeName (SAN)	<not included>
AuthorityInformationAccess (AIA)	< HTTP address of OCSP responder >
CRLDistributionPoints (CDP)	< HTTP address to access the ARL >

Where <purpose> is, for example, “TLS Server ECC”, while <year> is the year the SubCA was created. For example, the full commonName could be “Actalis Domain Validated TLS Server RSA CA 2025”.

7.1.2.2.2 Sub CAs for DV-class certificates – ACME

The certificates of the subordinate CAs have the following profile.

7.1.2.2.2.1 Legacy hierarchy

Field	Value
Version	V3 (2)
SerialNumber	< includes at least 8 pseudo-random bytes >
Signature	sha256WithRSAEncryption (1.2.840.113549.1.1.11)
Issuer	CN = Actalis Authentication Root CA O = Actalis S.p.A./03358520967 L = Milano C = IT
Validity	< According to section 6.3.2>
Subject	CN = Actalis DV Server ACME CA GN O = Actalis S.p.A. L = Ponte San Pietro S = Bergamo C = IT
SubjectPublicKeyInfo	< RSA public key of at least 2048 bits >
SignatureValue	< Root CA signature >
Extension	**Value**
Basic Constraints	critical: CA=true
AuthorityKeyIdentifier (AKI)	< Same value as the Root CA SKI extension >
SubjectKeyIdentifier (SKI)	< public key SHA1-digest >
KeyUsage	critical: keyCertSign, cRLSign
ExtendedKeyUsage (EKU)	serverAuth + clientAuth
CertificatePolicies	PolicyOID = 2.5.29.32.0 (anyPolicy) CPS-URI = < HTTP address of this CPS >
SubjectAlternativeName (SAN)	< not included >
AuthorityInformationAccess (AIA)	< HTTP address of OCSP responder >
CRLDistributionPoints (CDP)	< HTTP address to access the ARL >

7.1.2.2.3 Sub CAs for OV-class certificates

The certificates of the subordinate CAs have the following profile.

7.1.2.2.3.1 Legacy hierarchy

Field	Value
Version	V3 (2)
SerialNumber	< includes at least 8 pseudo-random bytes>
Signature	sha256WithRSAEncryption (1.2.840.113549.1.1.11)
Issuer	CN = Actalis Authentication Root CA O = Actalis S.p.A./03358520967 L = Milano C = IT
Validity	<According to section 6.3.2>
Subject	CN = Actalis Organization Validated Server CA GN O = Actalis S.p.A. L = Ponte San Pietro ST= Bergamo C = IT
SubjectPublicKeyInfo	<RSA public key of 2048 bits>
SignatureValue	<Root CA signature>
Extension	**Value**
Basic Constraints	critical: CA=true
AuthorityKeyIdentifier (AKI)	<Same value as the Root CA SKI extension>
SubjectKeyIdentifier (SKI)	<public key SHA1-digest>
KeyUsage	critical: keyCertSign, cRLSign
ExtendedKeyUsage (EKU)	< serverAuth + clientAuth >
CertificatePolicies	PolicyOID = 2.5.29.32.0 (anyPolicy) CPS-URI = <HTTP address of this CPS>
SubjectAlternativeName (SAN)	<not included>
AuthorityInformationAccess (AIA)	<HTTP address of OCSP responder>
CRLDistributionPoints (CDP)	<HTTP address to access the ARL>

7.1.2.2.3.2 New hierarchies

Field	Value
Version	V3 (2)
SerialNumber	<includes at least 8 pseudo-random bytes>
Signature	< In accordance with paragraphs 6.1.5 and 7.1.3>
Issuer	< Subject of the issuing Root CA >
Validity	< In accordance with paragraph 6.3.2>

Subject	CN = Actalis Organization Validated <purpose> CA <year> O = Actalis S.p.A. L = Ponte San Pietro S = Bergamo C = IT
SubjectPublicKeyInfo	< In accordance with paragraphs 6.1.5 and 7.1.3>
SignatureValue	<Root CA signature>
Extension	**Value**
Basic Constraints	critical: CA=true
AuthorityKeyIdentifier (AKI)	< value of the Root CA's SKI extension >
SubjectKeyIdentifier (SKI)	< public key SHA1-digest >
KeyUsage	critical: keyCertSign, cRLSign
ExtendedKeyUsage (EKU)	serverAuth
CertificatePolicies	PolicyOID = 2.5.29.32.0 (anyPolicy) CPS-URI = < HTTP address of this CPS >
SubjectAlternativeName (SAN)	<not included>
AuthorityInformationAccess (AIA)	< HTTP address of OCSP responder >
CRLDistributionPoints (CDP)	< HTTP address to access the ARL >

7.1.2.2.4 Sub CAs for EV-class certificates

The certificates of the subordinate CAs have the following profile.

7.1.2.2.4.1 Legacy hierarchy

Field	Value
Version	V3 (2)
SerialNumber	< includes at least 8 pseudo-random bytes>
Signature	sha256WithRSAEncryption (1.2.840.113549.1.1.11)
Issuer	CN = Actalis Authentication Root CA O = Actalis S.p.A./03358520967 L = Milano C = IT
Validity	<According to section 6.3.2>
Subject	CN = Actalis Extended Validation Server CA GN O = Actalis S.p.A. L = Ponte San Pietro ST = Bergamo C = IT
SubjectPublicKeyInfo	<RSA public key of at least 2048 bits>
SignatureValue	<Root CA signature>
Extension	**Value**
Basic Constraints	critical: CA=true
AuthorityKeyIdentifier (AKI)	<Same value as the Root CA SKI extension>
SubjectKeyIdentifier (SKI)	<public key SHA1-digest>
KeyUsage	critical: keyCertSign, cRLSign
ExtendedKeyUsage (EKU)	< serverAuth + clientAuth >
CertificatePolicies	PolicyOID = 2.5.29.32.0 (anyPolicy) CPS-URI = <HTTP address of this CPS>
SubjectAlternativeName (SAN)	<not included>
AuthorityInformationAccess (AIA)	<HTTP address of OCSP responder>
CRLDistributionPoints (CDP)	<HTTP address to access the ARL>

7.1.2.2.4.2 New hierarchies

Field	Value
Version	V3 (2)
SerialNumber	<includes at least 8 pseudo-random bytes>
Signature	< In accordance with paragraphs 6.1.5 and 7.1.3>
Issuer	< Subject of the issuing Root CA >
Validity	< In accordance with paragraph 6.3.2>

Subject	CN = Actalis Extended Validated <purpose> CA <year> O = Actalis S.p.A. L = Ponte San Pietro S = Bergamo C = IT
SubjectPublicKeyInfo	< In accordance with paragraphs 6.1.5 and 7.1.3>
SignatureValue	<Root CA signature>
Extension	**Value**
Basic Constraints	critical: CA=true
AuthorityKeyIdentifier (AKI)	< value of the Root CA's SKI extension >
SubjectKeyIdentifier (SKI)	< public key SHA1-digest >
KeyUsage	critical: keyCertSign, cRLSign
ExtendedKeyUsage (EKU)	serverAuth
CertificatePolicies	PolicyOID = 2.5.29.32.0 (anyPolicy) CPS-URI = < HTTP address of this CPS >
SubjectAlternativeName (SAN)	<not included>
AuthorityInformationAccess (AIA)	< HTTP address of OCSP responder >
CRLDistributionPoints (CDP)	< HTTP address to access the ARL >

Where <purpose> is, for example, 'TLS Server ECC', while <year> is the year the SubCA was created. For example, the full commonName could be 'Actalis Extended Validation TLS Server RSA CA 2025'.

7.1.2.3 Cross Certificates

Actalis cross-certificates have the profiles described below.

7.1.2.3.1 TLS Server Certificate Hierarchy

In the case of RSA keys

Field	**Value**
Version	V3 (2)
SerialNumber	<includes at least 8 pseudo-random bytes>
Signature	< According to the key type of the old Root CA and in accordance with paragraphs 6.1.5 and 7.1.3>
Issuer	< Subject of the old Root CA >
Validity	< NotAfter: expiration date of the old Root CA >
Subject	< Subject of the new Root CA >
SubjectPublicKeyInfo	< 4096-bit RSA public key >
SignatureValue	< Old Root CA signature>
Extension	**Value**
Basic Constraints	critical: CA=true
AuthorityKeyIdentifier (AKI)	< SHA1 - of the public key of the old Root CA >
SubjectKeyIdentifier (SKI)	< SHA1 - of the public key of the old Root CA >

KeyUsage	critical: keyCertSign, cRLSign
ExtendedKeyUsage (EKU)	TLS Web Server Authentication
CertificatePolicies	Any Policy
SubjectAlternativeName (SAN)	<not included>
AuthorityInformationAccess (AIA)	< HTTP address of OCSP responder >
CRLDistributionPoints (CDP)	< HTTP address to access the ARL >

In the case of ECC keys

Field	Value
Version	V3 (2)
SerialNumber	<includes at least 8 pseudo-random bytes>
Signature	< According to the key type of the old Root CA and in accordance with paragraphs 6.1.5 and 7.1.3>
Issuer	< Subject of the old Root CA >
Validity	< NotAfter: expiration date of the old Root CA >
Subject	< Subject of the new Root CA >
SubjectPublicKeyInfo	< ECDSA P-384 Public Key>
SignatureValue	< Signature of the old/previous Root CA >
Extension	**Value**
Basic Constraints	critical: CA=true
AuthorityKeyIdentifier (AKI)	< SHA1 - of the public key of the old Root CA >
SubjectKeyIdentifier (SKI)	< SHA1 - of the public key of the old Root CA >
KeyUsage	critical: keyCertSign, cRLSign
ExtendedKeyUsage (EKU)	TLS Web Server Authentication
CertificatePolicies	Any Policy
SubjectAlternativeName (SAN)	<not included>
AuthorityInformationAccess (AIA)	< HTTP address of OCSP responder >
CRLDistributionPoints (CDP)	< HTTP address to access the ARL >

7.1.2.4 Subscriber Certificates

7.1.2.4.1 TLS Server DV

The TLS Server DV certificate is issued with the following profile:

Field	Value
Version	V3 (2)
SerialNumber	<includes at least 8 random bytes>
Signature	< In accordance with paragraphs 6.1.5 and 7.1.3>
Issuer	< DN of the CA that issued the certificate >
Validity	<According to section 6.3.2>
Subject	CN = <one of the IP addresses or FQDNs contained in the SAN extension>
SubjectPublicKeyInfo	< In accordance with paragraphs 6.1.5 and 7.1.3>
SignatureValue	<Sub CA signature>
Extension	**Value**
Basic Constraints	<if included, is critical and contains CA=FALSE>
AuthorityKeyIdentifier (AKI)	<Same value as the Sub CA SKI extension>
SubjectKeyIdentifier (SKI)	<public key SHA1-digest>
KeyUsage	critical: digitalSignature, keyEncipherment (only for RSA keys)
ExtendedKeyUsage (EKU)	serverAuth (1.3.6.1.5.5.7.3.1)
CertificatePolicies	PolicyOID = 1.3.159.1.22.1 PolicyOID = 2.23.140.1.2.1 CPS-URI = <HTTP address of this CPS>
SubjectAlternativeName (SAN)	<One or more IP addresses and/or FQDNs>
AuthorityInformationAccess (AIA)	<HTTP address of OCSP responder> <HTTP address of the issuing CA certificate>
CRLDistributionPoints (CDP)	<HTTP address to access the CRL>
EmbeddedSCTList (1.3.6.1.4.1.11129.2.4.2)	List of Signed Certificate Timestamps according to RFC 6962 [CT]

Note: for a certificate requested for an FQDN in the form www.<domain>, the SAN extension also contains <domain> (without the “www” label), provided that Domain Control Validation is performed on <domain> (rather than www.<domain>) using a method that also covers subdomains. For example, for a certificate requested for www.example.org, the SAN extension may contain both www.example.org and example.org if example.org has been validated using the “DNS Change” method (Section 3.2.2.4.7 of the BR) or another method that covers subdomains.

7.1.2.4.2 TLS Server DV Wildcard

The Wildcard TLS Server DV certificate is issued with the following profile:

Field	Value
Version	V3 (2)
SerialNumber	<includes at least 8 pseudo-random bytes>
Signature	< In accordance with paragraphs 6.1.5 and 7.1.3>

Issuer	< DN of the CA that issued the certificate >
Validity	<According to section 6.3.2>
Subject	CN = <Wildcard FQDN, also contained in the SAN extension>
SubjectPublicKeyInfo	< In accordance with paragraphs 6.1.5 and 7.1.3>
SignatureValue	<Sub CA signature>
Extension	**Value**
Basic Constraints	<if included, is critical and contains CA=FALSE>
AuthorityKeyIdentifier (AKI)	<Same value as the Sub CA SKI extension>
SubjectKeyIdentifier (SKI)	<public key SHA1-digest>
KeyUsage	critical: digitalSignature, keyEncipherment (only for RSA keys)
ExtendedKeyUsage (EKU)	serverAuth (1.3.6.1.5.5.7.3.1)
CertificatePolicies	PolicyOID = 1.3.159.1.23.1 PolicyOID = 2.23.140.1.2.1 CPS-URI = <HTTP address of this CPS>
SubjectAlternativeName (SAN)	<Same wildcard FQDN as in the Subject.CN field, and possibly further FQDNs>
AuthorityInformationAccess (AIA)	<HTTP address of OCSP responder> <HTTP address of the issuing CA certificate>
CRLDistributionPoints (CDP)	<HTTP address to access the CRL>
EmbeddedSCTList (1.3.6.1.4.1.11129.2.4.2)	List of Signed Certificate Timestamps according to RFC 6962 [CT]

7.1.2.4.3 TLS Server OV

The TLS Server OV certificate is issued with the following profile:

Field	Value
Version	V3 (2)
SerialNumber	<includes at least 8 pseudo-random bytes>
Signature	< In accordance with paragraphs 6.1.5 and 7.1.3>
Issuer	< DN of the CA that issued the certificate >
Validity	<According to section 6.3.2>
Subject	C = <Two-letter code of country where the Subscriber is based> ST = <State or province where Subscriber is based> L = <Locality where Subscriber is based > O = <Registered name or DBA of Subscriber> CN = <optional, one of the IP addresses or FQDNs contained in the SAN>
SubjectPublicKeyInfo	< In accordance with paragraphs 6.1.5 and 7.1.3>
SignatureValue	<Sub CA signature>
Extension	**Value**
Basic Constraints	<if included, is critical and contains CA=FALSE>
AuthorityKeyIdentifier (AKI)	<Same value as the Sub CA SKI extension>
SubjectKeyIdentifier (SKI)	<public key SHA1-digest>
KeyUsage	critical: digitalSignature, keyEncipherment (only for RSA keys)
ExtendedKeyUsage (EKU)	serverAuth (1.3.6.1.5.5.7.3.1)
CertificatePolicies	PolicyOID = 1.3.159.1.20.1 PolicyOID = 2.23.140.1.2.2 CPS-URI = <HTTP address of this CPS>
SubjectAlternativeName (SAN)	<One or more IP addresses and/or FQDNs>
AuthorityInformationAccess (AIA)	<HTTP address of OCSP responder> <HTTP address of the issuing CA certificate>
CRLDistributionPoints (CDP)	<HTTP address to access the CRL>
EmbeddedSCTList (1.3.6.1.4.1.11129.2.4.2)	List of Signed Certificate Timestamps according to RFC 6962 [CT]

Note: for a certificate requested for an FQDN in the form www.<domain>, the SAN extension also contains <domain> (without the “www” label), provided that Domain Control Validation is performed on <domain> (rather than www.<domain>) using a method that also covers subdomains. For example, for a certificate requested for www.example.org, the SAN extension may contain both www.example.org and example.org if example.org has been validated using the “DNS Change” method (Section 3.2.2.4.7 of the BR) or another method that covers subdomains.

7.1.2.4.4 TLS Server OV Wildcard

The Wildcard TLS Server OV certificate is issued with the following profile:

Field	Value
Version	V3 (2)
SerialNumber	<includes at least 8 pseudo-random bytes>
Signature	< In accordance with paragraphs 6.1.5 and 7.1.3>
Issuer	< DN of the CA that issued the certificate >
Validity	<According to section 6.3.2>
Subject	C = <Two-letter code of country where the Subscriber is based> ST = <State or province where Subscriber is based> L = <Locality where Subscriber is based > O = <Registered name or DBA of Subscriber> CN = <optional, one of the IP addresses or FQDNs contained in the SAN>
SubjectPublicKeyInfo	< In accordance with paragraphs 6.1.5 and 7.1.3>
SignatureValue	<Sub CA signature>
Extension	**Value**
Basic Constraints	<if included, is critical and contains CA=FALSE>
AuthorityKeyIdentifier (AKI)	<Same value as the Sub CA SKI extension>
SubjectKeyIdentifier (SKI)	<public key SHA1-digest>
KeyUsage	critical: digitalSignature, keyEncipherment (only for RSA keys)
ExtendedKeyUsage (EKU)	serverAuth (1.3.6.1.5.5.7.3.1)
CertificatePolicies	PolicyOID = 1.3.159.1.**19**.1 PolicyOID = 2.23.140.1.2.2 CPS-URI = <HTTP address of this CPS>
SubjectAlternativeName (SAN)	<Same wildcard FQDN as in the Subject.CN field, and possibly further FQDNs>
AuthorityInformationAccess (AIA)	<HTTP address of OCSP responder> <HTTP address of the issuing CA certificate>
CRLDistributionPoints (CDP)	<HTTP address to access the CRL>
EmbeddedSCTList (1.3.6.1.4.1.11129.2.4.2)	List of Signed Certificate Timestamps according to RFC 6962 [CT]

7.1.2.4.5 TLS Server EV

The TLS Server EV certificate is issued with the following profile:

Field	Value
Version	V3 (2)
SerialNumber	<includes at least 8 pseudo-random bytes>
Signature	< In accordance with paragraphs 6.1.5 and 7.1.3>
Issuer	< DN of the CA that issued the certificate >
Validity	<According to section 6.3.2>
Subject	C = <Two-letter code of country where Subscriber is based> ST = <State or province where Subscriber is based> L = <Locality where Subscriber is based> STREET= <optional, where Subscriber is based> O = <Subscriber's registered name or DBA > CN = <optional, one of the elements contained in the SAN> serialNumber = <Subscriber's VAT number or an equivalent> businessCategory = <Organization type, according to [EVGL]>
SubjectPublicKeyInfo	< In accordance with paragraphs 6.1.5 and 7.1.3>
SignatureValue	<Sub CA signature>
Extension	**Value**
Basic Constraints	<if included, is critical and contains CA=FALSE>
AuthorityKeyIdentifier (AKI)	<Same value as the Sub CA SKI extension>
SubjectKeyIdentifier (SKI)	<public key SHA1-digest>
KeyUsage	critical: digitalSignature, keyEncipherment (only for RSA keys)
ExtendedKeyUsage (EKU)	serverAuth (1.3.6.1.5.5.7.3.1)
CertificatePolicies	PolicyOID = 1.3.159.1.**17**.1 PolicyOID = 2.23.140.1.1 CPS-URI = <HTTP address of this CPS>
SubjectAlternativeName (SAN)	<One or more IP addresses and/or FQDNs>
AuthorityInformationAccess (AIA)	<HTTP address of OCSP responder> <HTTP address of the issuing CA certificate>
CRLDistributionPoints (CDP)	<HTTP address to access the CRL>
EmbeddedSCTList (1.3.6.1.4.1.11129.2.4.2)	List of Signed Certificate Timestamps according to RFC 6962 [CT]

Note: for a certificate requested for an FQDN in the form www.<domain>, the SAN extension also contains <domain> (without the "www" label), provided that Domain Control Validation is performed on <domain> (rather than www.<domain>) using a method that also covers subdomains. For example, for a certificate requested for www.example.org, the SAN extension may contain both www.example.org and example.org if example.org has been validated using the "DNS Change" method (Section 3.2.2.4.7 of the BR) or another method that covers subdomains.

7.1.2.4.6 Qualified Website Authentication Certificate

The qualified TLS Server certificate ("Qualified Website Authentication Certificate"), variant of the TLS Server EV certificate, is issued with the following profile:

Field	Value
Version	V3 (2)
SerialNumber	<includes at least 8 pseudo-random bytes>
Signature	< In accordance with paragraphs 6.1.5 and 7.1.3>
Issuer	< DN of the CA that issued the certificate >
Validity	<According to section 6.3.2>
Subject	C = <Two-letter code of country where Subscriber is based> ST = <State or province where Subscriber is based> L = <Locality where Subscriber is based> STREET=<street where Subscriber is based > O = <Subscriber's registered name or DBA > CN = <optional, one of the elements contained in the SAN> serialNumber = <Subscriber's VAT number or an equivalent> joiCountryName=< code of the country where the Subscriber is registered> businessCategory = <Organization type, according to [EVGL]> organizationIdentifier = <according to [EVGL]>
SubjectPublicKeyInfo	< In accordance with paragraphs 6.1.5 and 7.1.3>
SignatureValue	<Sub CA signature>
Extension	**Value**
Basic Constraints	<if included, is critical and contains CA=FALSE>
AuthorityKeyIdentifier (AKI)	<Same value as the Sub CA SKI extension>
SubjectKeyIdentifier (SKI)	<public key SHA1-digest>
KeyUsage	critical: digitalSignature, keyEncipherment (only for RSA keys)
ExtendedKeyUsage (EKU)	serverAuth (1.3.6.1.5.5.7.3.1)
CertificatePolicies	PolicyOID = 1.3.159.1.**17**.1 PolicyOID = 2.23.140.1.1 PolicyOID = 0.4.0. 194112.1.4 (QCP-w) CPS-URI = <HTTP address of this CPS>
SubjectAlternativeName (SAN)	<One or more IP addresses and/or FQDNs, according to [EVGL]>
AuthorityInformationAccess (AIA)	<HTTP address of OCSP responder> <HTTP address of the issuing CA certificate>
CRLDistributionPoints (CDP)	<HTTP address to access the CRL>
QCStatements	id-etsi-qcs-QcCompliance id-etsi-qcs-QcPDS id-etsi-qcs-QcType
cabfOrganizationIdentifier	<according to [EVGL]>
EmbeddedSCTList (1.3.6.1.4.1.11129.2.4.2)	List of Signed Certificate Timestamps according to RFC 6962 [CT]

7.1.2.5 All certificates

The CA may include in the certificate further information (e.g. additional extensions and/or additional extension fields or values), provided that such additional information:

1) fully complies with both the [RFC 5280] and CAB Forum Requirements and Guidelines; and

2) cannot mislead Relying Parties about the certificate information verified by the CA.

7.1.3 Algorithm object identifiers

Certificates are normally signed using one of the following algorithms, depending on the type of CA key:

Algorithm name	Object Identifier
sha256WithRSAEncryption	1.2.840.113549.1.1.11
sha512WithRSAEncryption	1.2.840.113549.1.1.13
ecdsa-with-SHA256	1.2.840.10045.4.3.2
ecdsa-with-SHA384	1.2.840.10045.4.3.3

CRLs and OSCP responses are signed using one of the following algorithms, depending on the type of CA key:

Algorithm name	Object Identifier
sha256WithRSAEncryption	1.2.840.113549.1.1.11
sha512WithRSAEncryption	1.2.840.113549.1.1.13
ecdsa-with-SHA256	1.2.840.10045.4.3.2
ecdsa-with-SHA384	1.2.840.10045.4.3.3

7.1.4 Name forms

7.1.4.1 Issuer Information

The content of the certificate Issuer DN field shall match the Subject DN of the Issuing CA to support name chaining as specified in [RFC 5280], section 4.1.2.4.

7.1.4.2 Subject Information in Subscriber certificates

By issuing the Certificate, the CA represents that it followed the procedures set forth in this CPS to verify that, as of the Certificate's issuance date, all of the Subject Information was accurate. The CA shall not include a Domain Name or IP Address in a Subject attribute except as specified in section 3.2.2.4 or section 3.2.2.5.

7.1.4.2.1 Subject Alternative Name Extension

For all **TLS Server** certificates, the following rule applies:

- The ***SubjectAlternativeNames*** (**SAN**) extension must contain at least one item. Each of the items in this extension must be an IP address or an FQDN that the Subscriber either owns or controls. Internal server names or reserved IP addresses are not allowed. See also section 3.1.1.

- This extension is marked *critical* in case the Subject DN is empty.

The underscore character ("_") is not allowed in FQDNs.

7.1.4.2.2 Subject Distinguished Name Fields

For **DV TLS Server** certificates, the following rules apply:

- The **commonName** attribute (OID 2.5.4.3) of the Subject DN, if present, must contain a single FQDN (Fully Qualified Domain Name) from among those included in the SAN extension (see the preceding section). If an FQDN is too long (>64 characters), this attribute will be omitted.
- No other Subject DN attributes shall be present.
- The Subject field may be empty in DV TLS Server certificates, e.g., when it cannot accommodate a very long FQDN (longer that 64 characters).

For **OV TLS Server certificates**, the following rules apply:

- The ***commonName*** (OID 2.5.4.3) attribute of the Subject DN, if present, must contain one single IP address or Fully Qualified Domain Name (FQDN) among those contained in the SAN extension (see previous section);
- The ***organizationName*** attribute (OID 2.5.4.10) of the Subject DN must contain the name or DBA (Doing Business As) of the Subscriber. For a TLS Server certificate, it must be the entity that either owns or controls all the FQDNs and/or IP addresses included in the certificate.
- The ***localityName*** attribute (OID 2.5.4.7) of the Subject DN must contain the name of the locality (e.g., city) where the Subscriber is located (main place of business).
- The ***stateOrProvinceName*** attribute (OID 2.5.4.8) of the Subject DN must contain the name of the province (for Italian organizations) or Region/State (for foreign organizations) where the Subscriber's principal place of business is located.
- The ***countryName*** attribute (OID 2.5.4.6) of the Subject DN must contain the ISO 3166 two-letter code (e.g., "IT") of the country where the Subscriber's principal place of business is located.

For **EV TLS Server certificates,** the following additional rules also apply:

- The **businessCategory** attribute (OID 2.5.4.15) of the Subject DN must contain the Subscriber's organization type (either "Private Organization" or "Government Entity").
- The ***serialNumber*** attribute (OID 2.5.4.5) of the Subject DN must contain the VAT Number or other official registration number of the Subscriber.
- The ***jurisdictionOfIncorporationCountryName*** attribute (OID 1.3.6.1.4.1.311.60.2.1.3) of the Subject DN must contain the two-letter ISO 3166 code of the country where the Subscriber's organization was registered or incorporated.
- The ***streetAddress*** attribute (OID 2.5.4.9), if present, of the Subject DN must contain the address (e.g., street name and building number) of the Subscriber's main place of business.

For **Qualified Website Authentication Certificates (QWACs),** the following additional rules also apply:

- The ***organizationIdentifier*** attribute (OID 2.5.4.97) of the Subject DN must be populated according to the [EVGL].
- The **cabfOrganizationIdentifier** extension (OID 2.23.140.3.1) is also added to the certificate (see also paragraph 7.1.2.4.6) and is populated according to the [EVGL].

7.1.5 Name constraints

Actalis may issue, subject to a contractual agreement, Subordinate CA certificates to external entities, signed by an Actalis' root CA key. In such a case, the Subordinate CA certificate will be technically constrained in compliance with section 7.1.5 of the [BR].

7.1.6 Certificate policy object identifier

See section 1.4.

7.1.7 Usage of Policy Constraints extension

Not applicable.

7.1.8 Policy qualifiers syntax and semantics

See section 7.1.

7.1.9 Processing semantics for the critical Certificate Policies extension

Not applicable.

7.2 CRL profile

The CRLs shall conform to public specification [RFC 5280].

Besides the mandatory information, the CRLs also contain:

- *nextUpdate* (date for next issue of CRL)
- *cRLNumber* (sequential number of CRL)

CRLs are signed with the sha256WithRSAEncryption algorithm (OID 1.2.840.113549.1.1.11).

7.2.1 Version Number(s)

The version of CRL is v2 (1).

7.2.2 CRL and CRL entry extensions

Associated with each CRL entry, the *reasonCode* extension is used to indicate the reason of revocation.

For TLS certificates issued on or after October 1, 2022, when an SSL certificate is revoked for one of the following reasons, the specified CRLReason is included in the reasonCode extension of the corresponding CRL entry. Otherwise, the CRLReason code is omitted:

- *keyCompromise* (1)
- *affiliationChanged* (3)
- *superseded* (4)
- *cessationOfOperation* (5)
- *privilegeWithdrawn* (9).

7.3 OCSP profile

The OCSP service shall conform to public specification [RFC6960].

OCSP responses are not signed with the private key of the issuing CA, but rather with a specific key of the OCSP responder. Therefore, the OCSP responder's certificate contains the **ocspSigning** (OID 1.3.6.1.5.5.7.3.9) key purpose in its ExtendedKeyUsage extension. The OCSP responder's certificate also contains the **id-pkix-ocsp-no-check** (OID 1.3.6.1.5.5.7.48.1.5) extension.

OCSP responses conforms to the "pkix-ocsp-basic" profile (OID 1.3.6.1.5.5.7.48.1.1).

7.3.1 Version number(s)

The version of OCSP responses is v1 (0).

7.3.2 OCSP extensions

OCSP responses support the Nonce extension (OID 1.3.6.1.5.5.7.48.1.2).

8 Compliance audits and other assessments

Actalis shall issue certificates and operate its PKI in accordance with applicable law and comply with CAB Forum's requirements [BR] and guidelines [EVGL].

Actalis maintains continuous audit coverage for its CA operations, without gaps, from the time a CA key pair is generated until the corresponding CA Certificate is no longer trusted has expired or been revoked as applicable, or the corresponding key material has been destroyed and such destruction has been observed and reported by a qualified auditor, where required.

8.1 Frequency or circumstances of assessment

The compliance of the Actalis' CA services to this CPS, to Regulation (EU) No. 910/2014 ("eIDAS"), to the applicable ETSI standards and to the [BR] and [EVGL] requirements is verified on an annual basis by an accredited Conformity Assessment Body (CAB).

Moreover, always on an annual basis, an internal auditing activity is performed on the CA services that also takes into account aspects related to information security, applicable data protection rules and internal policies and procedures.

8.2 Identity and qualification of assessor

Compliance audits on the CA are carried out by a Conformity Assessment Body (CAB) accredited in compliance with Regulation (EC) no. 765/2008, through personnel that is qualified and competent on the subject of conformity assessments, according to the ETSI EN 319 403 norm, of Trust Service Providers and the related trust services provided under the eIDAS Regulation. Any second part audits are also performed by accredited bodies in compliance with Regulation (EC) no. 765/2008.

8.3 Assessor's relationship to assessed entity

The Assessment Bodies (CABs) that perform audits on the CA service, and possibly on the external RAs that collaborate with the CA, have no relation with Actalis.

The internal auditor does not belong to the organizational structure that deals with CA activities.

8.4 Topics covered by assessment

External audits shall evaluate, based on the ETSI EN 319 411-1 and ETSI EN 319 411-2 norms, the compliance with the [BR] and [EVGL], and the proper operation of the CA as described in this CPS, including any Delegates Third Parties (DTPs) that are not "Enterprise RA", with the exception of any "technically constrained" subordinated CAs (see par. 1.3.1).

Non-compliant DTPs cannot continue to perform the functions delegated to them until the non-conformities have been completely remediated.

8.5 Actions taken as a result of deficiency

The actions resulting from any non-compliance detected during audits (failure to meet the requirements defined in the regulations, standards, and applicable procedures) depend on the nature and severity of the non-compliance detected, on the rules for the management of non-compliances defined by the Assessment Body (CAB) and/or the internal non-conformity management procedures.

In general, if a substantive non-compliance results from an audit, Actalis will develop a plan to remedy this non-compliance as quickly as possible. This plan could result in changes to CA certification policies and/or practices, and/or to the CA software. The plan will be presented to the Actalis direction for approval, and then to any third parties with whom Actalis has commitments in this regard.

8.6 Communication of results

The result of the audit carried out by the CAB is communicated to the company management and to the heads of the organizational structure in charge of providing the CA service. The result of the audit (i.e. the Audit Report or Audit Statement) is also communicated to the national Supervisory Body (AgID).

Actalis makes the applicable audit statements publicly available and submits the required audit information to CCADB no later than ninety-two (92) calendar days from the point-in-time date or the end date of the audit period, as applicable. .

Audit statements disclosed by Actalis are authoritative, text-searchable, and available in English. They include the information required by the CCADB Policy and applicable Root Store Program policies, including the CA Owner name, auditor identity and qualifications, audited locations, SHA-256 fingerprints of in-scope Root CA Certificates and subordinate CA Certificates (cross certificates included), applicable audit standards and versions, audit period or point-in-time date, issue date, referenced policy documents, and incidents or findings that occurred, were open, or were reported during the audit period..

The result of internal audits or second-party audits is communicated to the company management, to the heads of the organizational structure responsible for providing the CA service and, where applicable, to the involved external entity/organization.

8.7 Self-audits

During the period in which the CA issues certificates, the CA shall monitor adherence to this CPS (and linked documents if any) and to the [BR] and [EVGL] requirements, and strictly control its service quality, by performing self-audits on at least a quarterly basis. Self-audits shall be carried out against a randomly selected sample of at least three percent of the certificates issued in the period beginning immediately after the last sample was taken, also using linting techniques and tools.

9 Other business and legal matters

The general Terms & Conditions of the CA service herein described are provided to customers as a separate document, to be accepted at application time, published on the CA web site (see par. 2.2).

9.1 Service fees

9.1.1 Certificate issuance or renewal fees

The maximum service fees are published on the CA web site.

Different conditions may be negotiated case by case, depending on volumes requested.

Service fees are subject to change without notice.

9.1.2 Certificate access fees

Not applicable.

9.1.3 Revocation or status information access fees

Access to certificate status services (CRL, OCSP) is free and open to everybody.

9.1.4 Fees for other services

No stipulation.

9.1.5 Refund policy

Please refer to the General Terms & Conditions published on the CA website.

9.2 Financial responsibility

9.2.1 Insurance coverage

Actalis maintains a special insurance with a major insurance company to cover the risks related to the provision of its certification services and other trust services. In particular, the insurance provides for a single limit per claim and per insurance period of EUR 15,000,000 (fifteen million Euros). The insurance company has at least an "A" rating in the Best's Insurance Guide.

9.2.2 Other assets

No stipulation.

9.2.3 Insurance or warranty coverage for end-entities

Please refer to par. 9.2.1.

9.3 Confidentiality of business information

9.3.1 Scope of confidential information

The following information is considered and treated as confidential:

- all information supplied to the CA by Applicants, except that intended to be included in Certificates;
- all communications between the CA and Applicants or Subscribers;

- any confidential codes provided to Subscribers by the CA or RA (such as the credentials necessary to login to the CA or RA websites);
- all information collected by the CA within the vetting process (identification and authentication);
- all contracts between the CA and other parties, including Subscribers, Application Software Suppliers, Delegated Third Parties (e.g. Resellers and Registration Authorities), subcontractors, etc.;
- all the private information of the CA (such as CA private keys, CA systems' accounts, passwords and other authentication credentials, business continuity and disaster recovery plans, internal procedures, internal infrastructure documentation, risk assessment reports, financial transaction records, etc.);
- the audit logs of the CA systems.

9.3.2 Information not within the scope of confidential information

All information that must be public for compliance with applicable law (see section 9.15) and regulations (including CAB Forum's Requirements and Guidelines), or on explicit request from the Subscriber, is considered non-confidential. In particular, the following information is considered non-confidential:

- all Certificates issued under this CPS;
- all Certificate Revocation Lists (see section 4.10);
- this CPS and other Actalis documents herein referred to;
- the status of Certificates provided via the OCSP service (see section 4.10);
- all information that the Applicant requested the CA to make public;
- all information obtainable from public information sources;
- any information that is already in the public domain.

9.3.3 Responsibility to protect confidential information

Actalis ensures that all confidential information is adequately protected from unauthorized access and from the risk of loss due to disasters (see section 5.7).

All confidential information is processed by the CA in compliance with applicable laws, in particular Legislative Decree no. 196/03 [DLGS196] and Regulation (EU) 2016/679 [GDPR].

9.4 Privacy of personal information

Actalis is the processor of the personal information collected during the identification and registration phase of parties requesting certificates under this CPS, and shall process such information ensuring their confidentiality and in compliance with the Italian Legislative Decree n.196/2003 [DLGS196].

9.4.1 Privacy plan

Regarding privacy, the CA complies with current laws, in particular Legislative Decree no. 196/03 [DLGS196] and Regulation (EU) 2016/679 [GDPR]. The protection of personal data is part of the Actalis' Information Security Management System (ISMS), compliant with ISO/IEC 27001.

9.4.2 Information treated as private

Please refer to the definition of personal data pursuant to current laws, in particular Legislative Decree no. 196/03 [DLGS196].

9.4.3 Information not deemed private

Non-personal data are those that do not fall within the definition in par. 9.4.2. Please also refer to par. 9.3.2.

9.4.4 Responsibility to protect private information

Actalis is the "data processor" for personal data pursuant to Legislative Decree no. 196/03 [DLGS196].

9.4.5 Notice and consent to use private information

The notice on the processing of personal data, pursuant to Legislative Decree no. 196/03 [DLGS196], is published on the CA website. The certificate request implies the Applicant's consent to the processing of personal data by the CA, in accordance with such notice.

9.4.6 Disclosure pursuant to judicial or administrative process

The Subscriber's personal data may be disclosed to the police, judicial authorities, information and security bodies or other public entities, pursuant to Legislative Decree no. 196/2003 [DLGS196], if that is required for the purposes of defense or security of the State or prevention, detection or repression of crimes.

9.4.7 Other information disclosure circumstances

Not applicable.

9.5 Intellectual property rights

This CPS is the property of Actalis who reserves all rights associated with the same.

The Subscriber keeps all the rights on its own commercial marks (brand names) and its own domain names.

Concerning the property rights of other data and information, the applicable law shall be applied.

9.6 Representations and warranties

9.6.1 CA Representations and Warranties

By issuing a Certificate, the CA makes certain warranties to the following Certificate Beneficiaries:

- the Subscriber;
- all Application Software Suppliers (e.g. certain web browser and/or operating system vendors) who have a Root Certificate distribution agreement in place with Actalis;
- all Relying Parties who reasonably rely on a valid certificate.

In general, Actalis undertakes to operate, in all material aspects, in compliance with this CPS.

More specifically, Actalis represents and warrants to the Certificate Beneficiaries that:

- [for TLS Server certificates] at the time of issuance, the CA followed the procedure described in this CPS for verifying that the Applicant either had the right to use, or had control of, the Domain Name(s) and IP address(es) listed in the Certificate's Subject field and subjectAltName extension (or, only in the case of Domain Names, was delegated such right or control by someone who had such right to use or control);

- at the time of issuance, the CA followed the procedures described in this CPS for verifying that the Subject authorized the issuance of the Certificate and that the Applicant Representative was authorized to request the Certificate on behalf of the Applicant;
- at the time of issuance, the CA followed the procedures described in this CPS for verifying the accuracy of all Subject information contained in the Certificate;
- if the Certificate contains Subject Identity Information, the CA verified the identity of the Applicant in accordance with the procedures described in this CPS;
- in the case of EV certificates, the CA has confirmed with the Incorporating or Registration Agency in the Subject's Jurisdiction of incorporation or Registration that, as of the date the Certificate was issued, the Subject named in the Certificate legally exists as a valid organization or entity in the Jurisdiction of Incorporation or Registration;
- if the CA and Subscriber are not affiliated, the Subscriber and CA are parties to a legally valid and enforceable Subscriber Agreement that satisfies the [BR] or the [EVGL] (depending on certificate class), or, if the CA and Subscriber are the same entity or are affiliated, the Applicant Representative acknowledged the Terms of Use;
- the CA maintains a 24 x 7 publicly-accessible Repository with current information regarding the status (valid or revoked) of all unexpired Certificates;
- the CA will revoke the Certificate for any of the reasons specified in this CPS.

9.6.2 RA Representations and Warranties

RAs must ensure their full compliance with the contract signed with the CA, in particular (but not only) to:

- accurate and secure I&A (authentication identification) of Applicants;
- diligent preservation of all the collected evidence (unless it is the responsibility of the CA, according to the specific contract stipulated with the RA), for the entire duration of the contract;
- proper use of the tools and transmission channels that the CA makes available to them.

9.6.3 Subscriber Representations and Warranties

Prior to the issuance of a Certificate, the CA shall obtain either the Applicant's agreement to a Subscriber Agreement with the CA, or the Applicant's acknowledgement of the Terms of Use. As part of the Subscriber Agreement or Terms of Use, the Applicant shall make the commitments and warranties listed below.

The Applicant represents and warrants to:

- read, understand and fully accept this CPS;
- request the certificate by the methods prescribed in this CPS;
- provide the CA with true, accurate and complete information at all times;
- ensure confidentiality of secret codes (e.g. passwords) received from the CA;
- take all reasonable measures to avoid compromise of its private keys;
- install and start using the certificate only after checking that it contains correct information;
- use the certificate only in the ways and for the purposes provided for in this CPS;
- never use its private keys, for no reason whatsoever, for issuing other certificates in turn;

- in the event of confirmed compromise of any of its private keys, immediately request revocation of the corresponding certificates and immediately stop using those certificates;
- in the event of CA compromise, immediately stop using its certificates;
- immediately request revocation of a certificate in the event that any of the information contained in the certificate (i.e. company name, web site address, etc.) is no longer valid;
- immediately inform the CA, after issue and up to expiry or revocation of the certificate, of any changes in the information supplied during the application phase;
- respond within 24 hours to requests by the CA related to possible improper use of certificates or possible key compromises;
- upon revocation of their certificate(s), immediately stop using the revoked certificates, and immediately remove the certificate from the servers on which it is installed;
- stop using certificates upon their expiration.

Moreover, the Subscriber shall install the certificate only on the servers that are accessible at the subjectAlternativeName(s) listed in the Certificate and operate those servers only in the ways allowed by this CPS and for lawful purposes only.

Subscribers acknowledge and accept that the CA, if made aware that a Subscriber's certificate is being used for unlawful purposes (e.g. phishing, Man-In-The-Middle attacks, distribution of malware, etc.) or for issuing other certificates, will revoke that Certificate immediately and without any notice.

The Subscriber shall cooperate with Actalis in a timely manner so that Actalis can comply with certificate revocation timelines required by the CA/Browser Forum TLS Baseline Requirements and applicable Root Store Program policies.

The Subscriber acknowledges that publicly trusted TLS Server certificates may be required to be revoked within short mandatory timelines and shall not deploy such certificates in systems or environments where timely certificate replacement cannot be tolerated.

The Subscriber shall promptly replace certificates, cease using affected certificates, provide requested information, and take any other reasonable action requested by Actalis where necessary to support revocation, incident response, mass revocation, or compliance with applicable requirements.

9.6.4 Relying Party Representations and Warranties

The term "Relying Parties" refers to all those entities (other than Subscribers) that rely on certificates for taking decisions (such as making information or resources available to the Subscriber, use the information or resources obtained from the Subscriber, etc.).

Each Relying Party, prior to relying on an Actalis certificate, represents and warrants that it:

- has made a reasonable effort to acquire a sufficient understanding of certificates and PKIs;
- has read, understands, and agrees to this CPS, including section 9.8 (limitations of liability);
- has verified the status of the certificate by one of the means described in section 4.10;
- will NOT rely on a certificate that is expired or revoked.

9.6.5 Representations and warranties of other participants

No stipulation.

9.7 Disclaimers of warranties

Except as expressly stated in this CPS or in a separate agreement with a Subscriber, Actalis does not make any further representations or warranties regarding its CA services. See also the Terms & Conditions published on the Actalis website.

9.8 Limitations of liability

Actalis' obligations and responsibilities are exclusively those set out in this document and in the Service Supply Agreement. In particular, Actalis is liable for damage caused to any natural or legal person as a result of failure to fulfil its contractual obligations or its obligations under applicable law, in the cases and within the limits provided for in Article 13 of the Regulation.

With specific reference to EV Certificates, any monetary limit on Actalis' liability towards each Subscriber or Relying Party for legally recognised and provable claims for damages shall be no less than USD 2,000 (two thousand US dollars) per Subscriber or Relying Party and per EV Certificate.

Subject to the foregoing, without prejudice to the assumptions provided for by law, in no other case, for any reason and/or reason, can Actalis be held liable towards the Customer, or to other parties, directly or indirectly, connected or connected to the Customer for damages, direct or indirect, data loss, violation of third party rights, delays, malfunctions, interruptions, total or partial, which must be verified against the provision of the Service, where directly or indirectly connected, or arising from:

a) causes of force majeure, fortuitous events, catastrophic events (for example, but not limited to: fires, explosions, strikes, riots, etc.); and/or

b) tampering or interventions on the Service or on the equipment carried out by the Customer and/or by third parties not authorized by Actalis.

Actalis will not, in any case, be held liable for the use made of the Service in relation to critical situations involving, without limitation, specific risks for the safety of persons, environmental damage, specific risks in relation to mass transport services, the management of nuclear and chemical plants and medical devices; in such cases, Actalis is available to evaluate and negotiate with the Customer a specific "mission critical" agreement with the respective "SLA" (Service Level Agreements).

Actalis makes no warranty on the validity and effectiveness, even probative, of the Service or any data, information, message, document or document associated with it or otherwise entered, communicated, transmitted, stored or in any way processed by the Service itself:

a) when the Customer intends to use them or assert them in States or legal systems other than the Italian one, with the exception, with regard to European Union member States, for the Certificates issued on the basis of this document;

b) for their secrecy and/or integrity (in the sense that any violations of the latter are, of course, detectable by the User or the recipient through the appropriate verification procedure).

Actalis does not assume, in any case, any responsibility for the information, data, contents entered or transmitted and, in any case, processed by the Customer through the Service and in general for the use made by the same

Service and reserves the right to adopt any initiative and action, to protect their rights and interests, including the communication, to the subjects involved, of the data useful for identifying the Customer.

9.9 Indemnities

9.9.1 Indemnification by CAs

Actalis acknowledges and agrees that Application Software Suppliers that have an agreement in force with Actalis, in its capacity as a Root CA, for the distribution of Root CA certificates do not assume, and cannot be deemed to have assumed, any obligation or liability, including potential liability, belonging to Actalis.

In particular, distribution or inclusion of Root CA certificates in software or its trust stores does not transfer to Application Software Suppliers any obligation or liability arising from Actalis' issuance, management or maintenance of those certificates, or from reliance placed on them by Third Parties.

Actalis undertakes to defend, indemnify and hold harmless each Application Software Supplier against any demand, action, claim, damage or loss suffered by that Supplier and in any way connected with a certificate issued by Actalis, regardless of the cause of action, basis of liability or legal grounds invoked.

The above obligations to defend, indemnify and hold harmless do not apply to demands, actions, claims, damages or losses directly caused by the Application Software Supplier's software that:

- represents a certificate that is still valid as untrusted;
- represents an expired certificate as trusted; or
- represents a revoked certificate as trusted, provided that, at the relevant time, Actalis makes the revocation status available online and the application software has failed to check it or has ignored the revocation status indication.

9.9.2 Indemnification by Subscribers

Subscribers shall pay compensation of any damages suffered by Actalis in the following cases:

- false declarations in the certification request;
- failure to provide information to the CA about essential matters and facts due to negligence or with the objective of deceiving the CA;
- use of names (for example, domain names, brand names) in violation of intellectual property rights;
- use of certificates for unlawful purposes and/or for purposes not allowed by this CPS.

9.10 Term and termination

9.10.1 Term

The Contract begins on the date of acceptance by the Contracting Party and ends on the expiry date of the certificate issued by Actalis; in case of renewal of the certificate itself, the validity of the Contract is deferred until the expiry date of the renewed certificate. In any case, the validity of the Contract will cease as a consequence of the revocation, for whatever reason, of the certificate.

9.10.2 Termination

Please refer to the General Terms & Conditions published on the CA website.

9.10.3 Effect of termination and survival

In the case of contract termination, the certificate of the Subscriber is revoked by the CA.

9.11 Individual notices and communications with participants

Actalis accepts correspondence related to this CPS, to be sent with the methods indicated in section 1.5.2. Senders are invited to digitally sign their communications, if possible, or use another reliable communication method. Valid communications will be reviewed and replied to as appropriate in a timely manner.

Requests for assistance related to the CA service herein described (e.g. technical questions, problems installing the certificate, certificate not received, etc.) can be addressed to Actalis only when the involved certificates have been purchased directly from Actalis. When the involved certificates have instead been purchased from a reseller, assistance must be requested to that reseller. The terms for requesting assistance are published on the CA's website as well as on the certificate purchase and/or request portal.

Problems related to already issued certificates must be reported to Actalis as described in section 1.5.2.

9.12 Amendments

9.12.1 Procedure for amendment

The CA reserves the right to make changes to this CPS at any time, without notice, due to technical or organizational reasons or regulatory changes. Each new version of the CPS repeals and replaces the previous versions.

9.12.2 Notification mechanism and period

This CPS is reviewed by the CA and, if necessary, updated at least once per year, even in the absence of regulatory changes. The new versions of the CPS are published on the CA website.

9.12.3 Circumstances under which OID must be changed

This CPS applies to various certificate policies (see paragraph 1.4), each identified by a specific OID. Revision of the CPS does not in itself imply the modification of those OIDs.

9.13 Dispute resolution provisions

If the Subscriber or the Applicant of the certificate is a Professional pursuant to Legislative Decree no. n.206/2005 ("Consumer Code"), any dispute deriving from the Contract will be deferred to the judgment of an Arbitration Board composed of three members, one of whom is appointed by Actalis, one appointed by the Contractor, and the third, who will act as President, appointed by the first two. Should one of the Parties fail to appoint its Arbitrator within 20 days of receiving the notice of appointment of Arbitrator sent by the other Party, that second Arbitrator shall be appointed, at the request of the latter Party, by the President of the Court of Arezzo. Similarly, if the two Arbitrators appointed by the Parties do not reach an agreement on the appointment of the third Arbitrator within 20 days from the appointment of the second Arbitrator, the third Arbitrator shall be appointed by the President of the Court of Arezzo upon request of the most diligent Party. The arbitration will be of a ritual nature and the Arbitrators will judge according to the law in accordance with the provisions of articles 806 and following of the Code of Civil Procedure.
The Arbitration will be held in Arezzo.

9.14 Governing law

This CPS is subject to Italian Law and as such it shall be interpreted and carried out. For that not expressly prescribed in this CPS, the applicable law shall prevail.

Other contracts in which this CPS is incorporated by means of reference, may contain distinct and separate clauses with respect to applicable law.

9.15 Compliance with applicable law

The main applicable laws are listed below:

- Regulation (EU) 2014/910 of the European Parliament and of the Council of 23 July 2014 on electronic identification and trust services for electronic transactions in the internal market and repealing Directive 1999/93 / EC (also "eIDAS").
- Legislative Decree March 7, 2005, No. 82: "Codice dell'Amministrazione Digitale", G.U. n.112 of 16 May 2005, and subsequent amendments and integrations (also "CAD").
- Legislative Decree 30 June 2003, n. 196: " Codice in materia di protezione dei dati personali ", G.U. n. 174 of 29 July 2003, and subsequent amendments and integrations.
- Regulation (EU) 2016/679 of the European Parliament and of the Council of 27 April 2016 on the protection of individuals with regard to the processing of personal data, as well as on the free movement of such data and repealing Directive 95/46/EC (also "General Data Protection Regulation" or GDPR).

9.16 Miscellaneous provisions

9.16.1 Entire agreement

This CPS, which may or may not be supplemented by general or specific Terms and Conditions signed by the Applicant, constitutes the discipline that regulates the use of the certificate by the Subscriber and regulates the relationship between Subscriber and CA. The certificate application implies the full and unconditional acceptance of this CPS by the Applicant.

9.16.2 Assignment

Please refer to the general Terms and Conditions published on the CA website.

9.16.3 Severability

The CA will abide by section 9.6.13 of the [BR], if applicable, and to the general Terms and Conditions published on the CA website.

9.16.4 Enforcement (attorneys' fees and waiver of rights)

Please refer to the general Terms and Conditions published on the CA website.

9.16.5 Force majeure

Actalis shall not be responsible for the failure to carry out the obligations assumed herein in the case when such non-fulfilment is due to causes not attributable to Actalis, such as – for instance, but not limited to – act of providence, unforeseen technical problems completely out of any form of control, intervention by the authority, force majeure, natural disasters, industrial actions including company strikes – inclusive of those at the premises of parties which are used for the execution of the activities associated with the services described herein, and other causes attributable to third parties.

9.17 Other provisions

9.17.1 Service levels

The CA guarantees the following minimum service levels:

Metric	Objective	Measurement basis
CRL and OCSP availability (24 x 7)	99.8 %	annual
CA website availability (24 x 7)	99.8 %	annual
Certificate issuing time	max 5 working days in 95% of all cases	annual
Time for certificate revocation (when requested on-line)	max 2 minutes in 95% of all cases	annual
Time for certificate revocation (when requested by e-mail, ordinary mail or fax)	max 6 hours in 95% of all cases	annual

Appendix A – Change History

DATE	VERS.	PARAGRAPHS	CHANGES	AUTHOR
14 Dec. 2005	1	-	Initial release	FP
24 June 2009	2	all	Complete review of document in accordance with RFC 3647	FP, AS
19 Nov. 09	2.0.1	1.3.1	Changed name of President	AS
13 May 2010	2.0.2	3.4	Removed sentence referring to private IP addresses in certificates (that is not allowed)	AS
18 May 2010	2.0.3	4.2, 8.1, 8.2, 8.4, 8.5, 8.6, 9.5.2, 9.8	Clarifications and integrations related to RAs	AS
18 May 2010	2.0.3	1.3.1	Updated Actalis' address; corrected the given name of the President.	AS
14 June 2011	2.0.4	1.3.1, 3.1, 4.1	Updated Actalis' legal representative. Clarified I&A and pre-issuance checks for wildcard and multi-SAN certificates	AS
28 Sep 2011	2.1.0	all	Transition to a 2-level CA hierarchy (Root CA, SubCA). Added details about management of CA keys. Clarified that two-factor authentication is required for all accounts allowing certificate issuance. Clarified that certificate serial numbers include at least 8 random bytes. SHA-256 used for certificate and CRL issuance. Updated minimum key lengths.	AS
6 Nov 2013	2.2.3	all	Alignment to Italian CPS v2.2.3	AS
13 Nov 2013	2.2.4	all	Updated name of Actalis CEO in §1.3.1. New section 4.13 on certificate problem reporting. Modified §1.3.2 to cover Enterprise RAs. Addedd OV profiles in §1.4 and in chapter 7. Modified §3.1 for more clarity. Clarifications in §3.3 regarding checks. Clarifications on the use CNames in CRL and OCSP URLs.	AS
14 Feb 2014	2.2.5	all	CAB Forum compliance made explicit at beginning of chapter 3. Clarification about IDNs.	AS
03 Sep 2014	2.2.6	3.1.1, 4.13, 6.33	Clarified that hostnames are not allowed in Code Signing certificates. Added phone number for certificate problem reporting. Keys of 1024-bits are not allowed anymore.	AS
20 Oct 2014	2.2.7	all	Added support of DV (Domain Validated) certificates. Added digital signature as a means to validate individual identities. Correction of typos and some clarifications.	AS
9 Dec 2014	2.3	all	Correction of typos.	AS
13 Mar 2015	2.4	various	New section 1.3.5 (Resellers). Corrections and clarifications in §1.4 (Use of certificates), §4.1 (Certificate application), and §4.9.6 (Procedure for suspension and revocation).	AS

26 Aug 2015	2.5	various	New §1.3.5 (Resellers). Corrections in §1.4 (Use of certificates), in §4.1 (Certificate application), and in 4.9.6 (Procedure for suspension and revocation). Clarifications on the URLs of CRL and OCSP services. Clarifications on support and assistance. Additional ways to validate domain control. Some paragraphs moved or renamed for better clarity. Dedicated SubCA for EV-class certificates. Addedd CAB Forum Policy OIDs to some EE certificate profiles.	AS
22 March 2016	2.6	1.3.1, 4.13	Modified coversheet after organizational changes. Changed company address and phone numbers.	AS
05 August 2016	2.7	1.4, 3.4	Clarification on .onion domains. Clarification on CAA Records.	AS
06 October 2016	2.8	1.3, 7	Clarifications on CAs. Inclusion of cAIssuers in the AIA certificate extension. Dedicated SubCA for DV-class TLS Server certificates.	AS
24 July 2017	2.9	1.7, 3.2, 4.3	Changed from ETSI 102 042 to 319 411-1 in References. CAA Records are now checked. For EV certs, handwritten signature allowed if authenticated by notary. Clarifications on validation of authority and on non-verified subscriber information.	AS
28 Aug 2017	3.0	4.3, 7.3	Correction of typos. New paragraph 7.3 with OCSP profile.	AS
22 Jan 2018	4.0	All	Restructuring and revision of the entire document for easier comparison with RFC 3647 and CABF Baseline Requirements. Clarified that certain types of certificates may be issued to individuals. Disclosure of a new Subordinate CA for OV certificates. Removed references to EV Code Signing certificate, not currently offered.	AS
27 Apr 2018	4.1	3.1.1, 3.2.2.5, 4.3.1, 7.1.2.3	Clarified that DV- and EV-class TLS Server certificates may not contain IP addresses. Added mandatory Certificate Transparency for all classes of TLS Server certificates	AS
23 Mag 2018	5.0	1.4, 1.5, 1.7, 4.6, 7.1.2.3, 5, 6, 8, 9	Expanded chapter 4 for better clarity. Revised chapters 5, 6, 8, 9 for alignment with other Actalis' CPSes. Added QWACs (Qualified Web Authentication Certificates). Updated normative references.	AS
28 Feb 2019	5.1	1.3.1	New Legal representative	AS
23 May 2019	5.2	1.3.1.2, 3.2.2.5, 4.9.1.1, 7.1.2.3, 7.1.4.2.1	Aligned with current version of [BR] and [EVGL]. Updated list of Subordinate CAs. Clarifications on certificate profiles. Correction of typos.	AS
29 Aug 2019	5.3	7.1	Added paragraph on applicability of Determinazione AgID n.121/2019	FC

26 Sep 2019	5.4	4.9.1.1, 7.1.2.3	Clarification on the revocation by the CA in case of any non-compliance of certificates to the BR and/or the EVGL. Added support for ECC keys (P256/P384) in Subscriber certificates.	AS
08 Oct 2019	5.5	7.1.2.2	Clarifications on EKU in SubCA certificates for compliance with the Mozilla Root Store Policy	AS
22 Jan 2020	5.6	1.3.1.2, 1.5.2, 3.2.2.4, 4.2.2, 4.10.3, 4.12.1, 4.12.2, 4.13, 5.6.2, 6.2.3, 7.1.4.2, 7.1.2.3	Updated table of SubCAs. Clarifications in §3.2.2.4. Moved text of former §4.13 to §1.5.2 for compliance with the BR, then removed §4.13. Repeated in §4.2.2 that internal names are not allowed. Added §4.10.3, §4.12.1, and §4.12.2 for compliance with RFC3647. Revisions and corrections in some certificate profiles. Clarified that key escrow is not provided.	AS
15 Jul 2020	5.7	4.1.2, 4.9.5, 6.1.5, 6.3.2, 9.11	Update and specification of how to request the certificate. Details on the time for revocation. Accuracy on algorithms and key length of the Holders. Maximum validity of TLS Server certificates reduced to 398 days. Clarifications on assistance.	AS
5 Oct 2020	5.8	1.3.1.2, 1.4.2, 3.2.2.4	Updated list of intermediate CAs. Added warning about ICA embedding and certificate pinning. Updated list of supported DCV methods (added ACME http-01)	AS
22 Apr 2021	5.9	1.1, 1.7, 6.1.2, 6.1.3, 6.1.5, 6.2.1, 9.6.1, 9.6.3, 3.2.2.1	Inserted reference to Code Signing Baseline Requirements. Updates for Code Signing certificates. Inserted reference to list of approved incorporating agencies.	AS
14 Jun 2021	5.10	3.2.2.4, 3.2.2.8 4.9.12	Alignment with Mozilla Root Policy. Adaptation to CABF Ballot SC45. Adaptation to CABF Ballot SC46. Specified how to report a compromised private key to the CA.	AS
29 Apr 2022	5.11	3.2.2.1; 3.2.2.3; 7.1.4.2.1; 7.1.4.2.2	Identity validation update Alignment in chapter numbering Update of SAN and FQDN policies	AS
10 Oct 2022	5.12	4.1.2 4.9.1.1	Update of the procedures for signing the request for EV certificates. Update of the circumstances for the revocation of a Subscriber Certificate	AS
17 May 2023	5.13	1.3.1.2, 3.1, 4.1.2, 5.5.2, 6.1, 6.2, 6.8, 7.1.2, 7.1.3, 7.1.4, 7.2, 9.6.1	Correction of small typos. Updated the Subordinate Certification Authorities table. Removed references to the “organizationalUnitName” (OU) attribute. Added clarifications for Code Signing certificates’ enrollment process. Corrected the QWAC certificate profile. Clarified that Subject may be empty in DV SSL certificates. Changed requirements for private key protection and verification in the case of Code Signing certificates.	AS

			Added information about Actalis' TSA. Clarified usage of CRLReason in CRL entries. Updated algorithm object identifiers. Changed retention period for records archival.	
16 May 2024	5.14	1.3.1.2, 1.6, 3.2.2.9, 3.2.5, 4.2.1, 6.2.7.4, 7.1, 7.1.2.2	Annual revision of the document. Subordinate CA 'Actalis DV Server ACME CA G1' added. Adaptation to BR 2.0.4 and EVGL 2.0.1. Correction of typos. Clarification of Code Signing certificates	AS, EDF
09 July 2024	5.15	1.1, 2.1, 4.2.1, 4.10.1, 6.7, 7	Correction of typos and some clarifications.	AS, EDF
15 Jan 2025	5.16	3.2.2.1, 3.2.2.4, 3.2.2.8, 4.3.1, 4.9.1, 4.9.9, 4.9.10, 5, 6.1.1,6.1.5 6.6.1, 7.2, 8.7.	Correction of internal protocol number of the document and typos. Integrations regarding the updating of the list of authoritative sources consulted by the CA. Removal of the use of the WHOIS protocol when authenticating domains. Supplements on CA's revocation case. Introduction of pre-issuance and post-issuance verifications of certificate conformity (*linting*). Restyling of sections 4.9.9 and 4.9.10. Additions about key pair generations and key sizes. Formatting changes in section 7.2. Revised public information on the CA's security measures.	AS, NP
11 March 2025	5.17	1.4.2, 3.2.2.1, 3.2.2.9, 4.5, 4.7 4.8, 4.9.1.1, 7.2	Integration about applicable standards, integration of par 3.2.2.1, introduction of MPIC, restructured par. 4.5, 4.8, 4.9 and 7.2 for better accordance with RFC-3647, added details on revocation reasons.	AS, NP
18 June 2025	5.18	1.3.1.2, 3.2.2.4, 4.9.3, 6.1.5, 6.2.1,6.2.7	Removal of SubCA *Actalis Client Authentication CA G1*, removal of domain validation method BR#3.2.2.4.2 (email to domain contact), provision for mass revocation scenarios, additions about key pair generations and key sizes, specification regarding cryptographic module certification, correction of typos.	AS, NP
27 November 2025	5.19	4.2.2, 4.9.9, 4.10.1, 5.2, 5.4.1, 5.7.1, 6.7	Minor amendment to paragraph 4.2.2, Addition regarding the OCSP protocol, Specification on CRL partitioning, Added detail concerning the asset inventory, Specification regarding firewall configuration tracking, Added requirements for the management of mass revocation	AS, NP
18 December 2025	5.20	1.3, 6.3.2, 7.1.2	Additions to the PKI infrastructure with the introduction of new RootCA and SubCA certificates	AS, BS, NP
15 March 2026	5.21	3.2.2.5, 4.2.2, 4.3.1, 6.3.2	Removal of reverse-IP address lookup validation method, pre-issuance checks update, content integration, certificate validity period change,	AS, FM, NP
29 May 2026	6.0	All	Refocused the document exclusively on the TLS certificate issuance and management service.	AS, FM, NP
09 November 2026	6.1	1.1, 1.3, 1.4.2, 1.5.4, 1.7, 3.1.1, 3.2.2, 4.2.2, 4.9,	General additions and updates to the CA's unique identifier, the geographical scope of certificate sales, the use of certificates in critical infrastructures, the	NP, AS

		5.1.6, 5.1.7, 5.4.8, 5.8, 6.1.6, 6.1.7, 6.2.7, 6.5.1, 6.7, 6.8, 7.1, 9.8, 9.9.1	manual approval procedure and normative references. Streamlined the content relating to subject naming and expanded the provisions on Applicant verification, MPIC checks, the use of exclusion lists and processing of the accounturi and validationmethods parameters. Clarified revocation reason codes and the circumstances for revoking Subordinate CA certificates. Expanded the provisions on media decommissioning, waste disposal, vulnerability management and remediation, and evidence retention following termination of CA operations. Clarified cryptographic key generation criteria and expanded the provisions on the use of CA keys, HSM certification and time management and synchronization. Updated and aligned certificate profiles with Root Program requirements and expanded the provisions on liability limits for EV Certificates and indemnification.	